SUBMITTAL: EXTERIOR ACCESS PANEL XPA™ and XPS™ SERIES

Select this gasketed and insulated access panel with a door that opens to 170° for exterior applications.

STEP 1 SELECT MODEL:

___ **Model XPA - R value 5.7**
Frame: 16 ga. galvanneal steel.
Door: 2" Thick with fiberglass insulation, .040 aluminum door with continuous stainless hinge.
Gaskets: Adhesive backed EPDM foam and silicone rubber seals on frame and door.
Finish: White powder coat paint.
Handle: (H2) Non-locking, plastic with chrome finish.

___ **Model XPS Stainless steel - R value 5.7**
Frame: 16 ga. Stainless steel.
Door: 2" Thick with fiberglass insulation, 20 ga. stainless steel door with continuous stainless hinge.
Gaskets: Adhesive backed EPDM foam and silicone rubber seals on frame and door.
Finish: 304 Stainless – No. 4 finish
Handles: (H2) Non-locking, plastic with chrome finish.

XPA

XPS

STEP 2 SELECT SIZE FROM TABLE BELOW OR ENTER OTHER SIZE:

Sizes: ORDER SIZE IS FRAME ID. Minimum 8" x 8". Maximum size 48" x 48"
____ Other Size ____ W x ____ H

Order Format Example: XPA-1212H2W

XP	-___	___	___	___	-___
XPS	Width	Height	Lock (H2 std) H3 or H4	Color	Other Options

STEP 3 SELECT OPTIONAL FEATURES AT ADDITIONAL COST:

____ (H3) Locking, plastic with chrome finish
____ (H4) Removable flush locking handle
____ Rainhood (-R)
____ Optional Color Code - See colors below

W (White)	B (Bronze)	R (Red)	BK (Black)	S (Sand)	AB (AMS Beige)	SB (SC Beige)	G (Gray)	SI (Silver)

QTY	Size (A)	Wall Opening	Handles	Approx Ship Weight in lbs.	QTY	Size (A)	Wall Opening (C)	Handles	Approx Ship Weight in lbs.
	12" x 12"	12-3/8" x 12-3/8"	1	11		24" x 30"	24-3/8" x 30-3/8"	2	40
	14" x 14"	14-3/8" x 14-3/8"	1	15		24" x 36"	24-3/8" x 36-3/8"	2	42
	18" x 18"	18-3/8" x 18-3/8"	1	19		24" x 48"	24-3/8" x 48-3/8"	2	57
	20" x 24"	20-3/8" x 24-3/8"	1	30		30" x 30"	30-3/8" x 30-3/8"	2	44
	20" x 30"	20-3/8" x 30-3/8"	2	32		30" x 36"	30-3/8" x 36-3/8"	2	56
	22" x 30"	22-3/8" x 30-3/8"	2	34		36" x 36"	36-3/8" x 36-3/8"	2	61
	22" x 36"	22-3/8" x 36-3/8"	2	40		36" x 48"	36-3/8" x 48-3/8"	2	75
	24" x 24"	24-3/8"x 24-3/8"	1	27		48" x 48"	48-3/8" x 48-3/8"	2	108

It is the responsibility of the customer to communicate specifications and product performance requirements that are needed for their application. This document is intended to convey potential product configurations and offerings. It is not to be used to imply or represent a specification or rating, of finished products shipped. Detailed, specific submittals can be created upon request. It is the responsibility of the customer to specify product accordingly to comply with local laws, codes, and ordinances.

JL INDUSTRIES
9702 Newton Avenue S, Bloomington, MN 55431
800-554-6077
sales@activarcpg.com
www.activarcpg.com

Distributor:		Project:	
Contractor:		Approved By:	
Date:		Architect:	
Scale: N/A	Page 1 of 2	Item#:	

© 2024 Activar Construction Products Group, Inc.
THE INFORMATION CONTAINED IN THIS DRAWING IS THE SOLE PROPERTY OF ACTIVAR CONSTRUCTION PRODUCTS GROUP, INC.
ANY REPRODUCTION IN PART OR AS A WHOLE WITHOUT WRITTEN PERMISSION IS PROHIBITED.

SUBMITTAL: EXTERIOR ACCESS PANEL XP™ and XPS™ SERIES

Rainhood

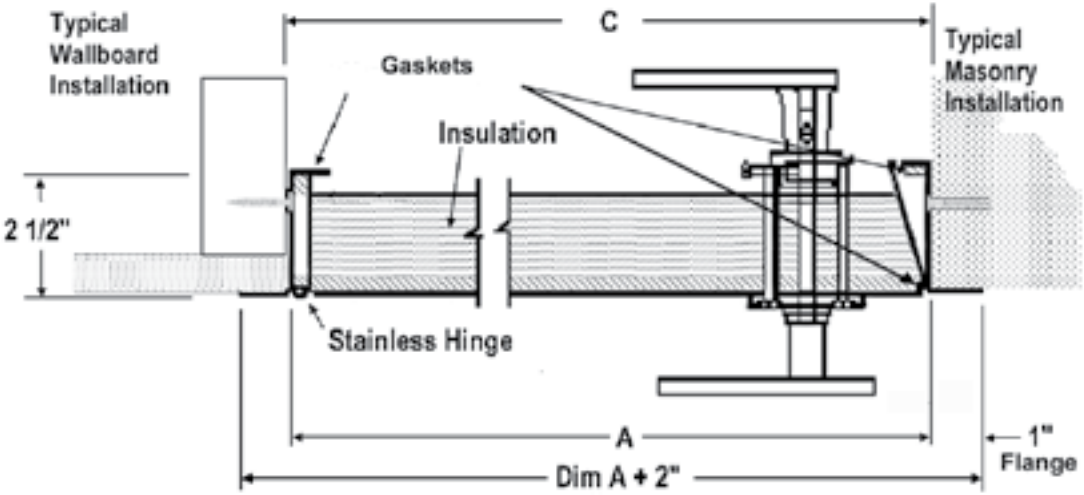

LATCH AND LOCK OPTIONS

H2 Non-Locking Handle
(Standard)

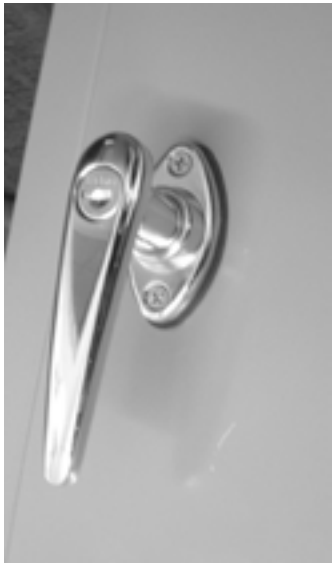

H3 Locking Handle

(H4) Removable
Flush Locking Handle

Inside Latch for (H4) Removable
Flush Locking Handle

© 2024 Activar Construction Products Group, Inc.

THE INFORMATION CONTAINED IN THIS DRAWING IS THE SOLE PROPERTY OF ACTIVAR CONSTRUCTION PRODUCTS GROUP, INC.
ANY REPRODUCTION IN PART OR AS A WHOLE WITHOUT WRITTEN PERMISSION IS PROHIBITED.