Cold-Formed

Structural Framing Systems

PRODUCT CATALOG

MARINO WARE®

100% American-Owned and Operated | marinoware.com

THE BEST PRODUCTS, QUALITY, AND CUSTOMER SERVICE.

Our large inventory of both finished products and coil steel allow us to readily satisfy your requests. Our fleet of trucks assures prompt deliveries and in many instances, next day delivery. Our experienced sales team, coupled with an extensive distribution network, make Marino\WARE® the obvious choice for your project.

Marino\WARE®, a division of Ware Industries, is a long-standing manufacturer of steel framing products, and is committed to leading the industry in innovation, quality materials and customer service. Headquartered in South Plainfield, N.J., it has produced steel solutions for more than 70 years, and offers a wide choice of framing components and connectors that save their customers time, labor and cost. Marino\WARE® operates state-of-the-art production facilities in New Jersey, Georgia, and Indiana, as well as a sales office in New York.

For more information on our products and services, call 1-800-627-4661 or visit www.MarinoWARE.com.

IBC 2021 COMPLIANT

ICC ES™

ESR-4062

ICC-ES Certified Code Compliant Product

Warranty & Limitations

All products presented herein are warranted to the buyer to be free from defects in material and workmanship. The foregoing warranty is non-assignable and in lieu of and excludes all other warranties not expressly set forth herein, whether express or implied by operation of law or otherwise, including but not limited to any implied warranties of merchantability or fitness for a particular purpose. All details and specifications presented herein are intended as a general guide for the use of Marino\WARE® framing systems. These products should not be used without evaluation by a qualified engineer or architect to determine their suitability for a specific use.

Marino\WARE® assumes no responsibility for failure resulting from use of its details or specifications, or for failure resulting from improper application or installation of these products.

Governing Law

All issues arising in connection with your order and all transactions associated with it shall be interpreted according to the laws of the State of New Jersey, and all actions or other proceedings arising out of such issues shall be brought only in Superior Court, State of New Jersey, County of Essex, or United States District Court for the District of New Jersey. No action may be brought more than one year after accrual of the cause of action therefore.

TABLE OF CONTENTS

Nomenclature Example. 4
Framing Components. 5
General Information. 6
Stud Section Properties 7-9
Web Depth-to-Thickness Ratios 10
Allowable Screw Connection Capacities 10
Weld Capacities. 10
Track Section Properties 11
Interior Limiting Heights 14-17
Curtainwall Single Span Tables 18-22
Curtainwall Double Span Tables. 23-27
Curtainwall Illustrations 28
Diagonal Cross Bracing 29
Combined Axial and Lateral Loads 3 5/8" Members 30-32
Combined Axial and Lateral Loads 4" Members 33-35
Combined Axial and Lateral Loads 6" Members 35-38
Combined Axial and Lateral Loads 8" Members 38-40
Combined Axial and Lateral Load Illustrations 41
Mechanical Bridging 42
Floor Joist Illustrations, Notes. 43
Floor Joist Spans 10 psf Dead Load and 20 psf Live Load . . .44-45
Floor Joist Spans 10 psf Dead Load and 30 psf Live Load . . .46-47
Floor Joist Spans 10 psf Dead Load and 40 psf Live Load . . .48-49
Floor Joist Spans 10 psf Dead Load and 50 psf Live Load . . .50-51
Floor Joist Spans 15 psf Dead Load and 125 psf Live Load . .52-53
Floor Joist Spans 40 psf Dead Load and 125 psf Live Load . .54-55
Header Loads, Illustrations 56-57
Web Crippling. 58
Web Crippling Loads Single Members. 59
Web Crippling Loads Back-to-Back Members. 60
Ceiling Span (C-Section) Notes, Illustrations 61-62
Allowable Ceiling Spans. 63

ASTM SPECIFICATION DESCRIPTIONS

A1003 - Standard specification for steel sheet, carbon, metallic and nonmetal-coated for cold formed framing members

A653 - Standard specification for steel sheet, zinc-coated (galvanized) or zinc-iron alloy coated by galvannealed hot-dip process

A924 - Standard specification for general requirements for steel sheet, metallic-coated galvannealed by the hot-dip process

C754 - Standard specification for installation of steel framing members to receive screw-attached gypsum panel products

C955 - Standard specification for load-bearing (transverse and axial) steel studs, runners (tracks), and bracing or bridging for screw application of gypsum panel products and metal plaster bases

CODE COMPLIANCE - ICC-ES ESR#4062

AISI STANDARDS

AISI S100-16/S2-20 North American Specification for the Design of Cold-Formed Steel Structural Members

AISI S240 - North American Standard for Cold-Formed Steel Structural Framing

TECHNICAL SERVICES

Marino\WARE offers its customers free expert technical assistance with the selection and use of our products. If you have questions or need more information on any of the products listed in this catalog, contact our Technical Services department. Our knowledgeable staff is ready to assist you. In most cases Technical Services representatives can provide immediate responses.

Technical Services can be reached at 866-545-1545, or at technicalservices@marinoware.com.

LEED® INFORMATION - MATERIALS & RESOURCES

Marino\WARE® is proud to support the building industry in its efforts to create sustainable commercial and residential buildings. We support the Leadership in Energy & Environmental Design (LEED®) program and have LEED® accredited professionals on staff. Using products manufactured by Marino\WARE® can help in accumulating LEED® points in several categories.

NOMENCLATURE EXAMPLE

600 S 162 - 54

MEMBER DEPTH	TYPE	FLANGE WIDTH	MILS TO GAUGE
250 = 2-1/2″	S = Stud	137 = 1-3/8″	33 = 20 STR ga.
362 = 3-5/8″	T = Track	162 = 1-5/8″	43 = 18 ga.
400 = 4″		200 = 2″	54 = 16 ga.
600 = 6″		250 = 2-1/2″	68 = 14 ga.
800 = 8″		300 = 3″	97 = 12 ga.
1000 = 10″		350 = 3-1/2″	118 = 10 ga.
1200 = 12″			
1400 = 14″			
1600 = 16″			

MILS	MINIMUM THICKNESS (in.)	DESIGN THICKNESS (in.)	INSIDE BEND RADIUS (in.)	GAUGE	COLOR CODE
33	0.0329	0.0346	0.076	20 Structural	WHITE
43	0.0428	0.0451	0.071	18	YELLOW
54	0.0538	0.0566	0.085	16	GREEN
68	0.0677	0.0713	0.107	14	ORANGE
97	0.0966	0.1017	0.153	12	RED
118	0.1180	0.1242	0.186	10	BLUE

MEMBER	FLANGE WIDTH	RETURN LIP
S137	1-3/8″	0.375
S162	1-5/8″	0.500
S200	2″	0.625
S250	2-1/2″	0.625
S300	3″	0.625
S350	3-1/2″	1.000

Minimum thickness represents 95% of the design thickness and is the minimum acceptable thickness delivered to the project site based on section B7.1 of AISI S100.

Symbols and Definitions

Gross Properties

I_x	Moment of inertia about x-axis
S_x	Section modulus about x-axis
r_x	Radius about x-axis
I_y	Moment of inertia about y-axis
r_y	Radius about y-axis

Effective Properties

I_{xd}	Deflection moment of inertia about x-axis
S_{xe}	Section modulus about x-axis
M_{al}	Allowable moment based on local buckling
M_{ad}	Allowable moment based on distortional buckling, assuming $K_\phi = 0$
M_a	Allowable moment for track and channel sections based on local buckling
V_{ag}	Allowable strong axis shear away from punchout, per AISI Section C3.2.1
V_{anet}	Allowable strong axis shear at punchout, per AISI Section 3.2.2

Torsional and other Properties

J	Saint-Venant torsion constant. The values shown in the tables have been multiplied by 1,000. To obtain the actual values, divide table values by 1,000
C_w	Torsional warping constant
x_o	Distance from shear center to centroid along principal x-axis
m	Distance from shear center to mid-plane of web
r_o	Polar radius of gyration about shear center
ß	$1 - (x_o / r_o)^2$
L_u	Limit of unbraced length below which lateral-torsional buckling is not considered
K_ϕ	Rotational stiffness

STUD

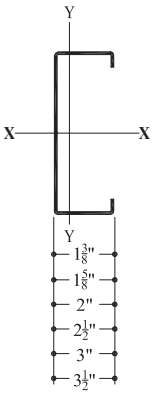

TRACK

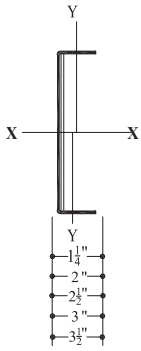

For more information, please contact Marino\WARE® Technical Services at 866.545.1545
This technical information reflects the most current information available and supersedes any and all previous publications effective February 17, 2023 | MW-Cold Formed Catalog | © WARE Industries, Inc., 2023

FRAMING MEMBERS

STUD AND JOISTS (CW, SW, J, JE, JX, & JXW)

Studs serve as a general all purpose framing component used in a variety of applications including exterior curtainwalls, load bearing walls, headers, floor & roof joists, soffits and truss frame components.

TRACK (T & DT)

Track is used as a closure to stud and joist ends as well as head and sill conditions. It is also used for blocking and bridging conditions.

C-STUDS (CW, SW, J, JE, JX & JXW)

M\W	GAUGES	WEB	FLANGE	RETURN LIP
CW	20 – 14	2-1/2" – 8"	1-3/8"	3/8"
SW	20 – 10	2-1/2" – 16"	1-5/8"	1/2"
J	20 – 10	2-1/2" – 16"	2"	5/8"
JE•	18 – 10	3-5/8" – 16"	2-1/2"	5/8"
JX•	16 – 10	3-5/8" – 16"	3"	5/8"
JXW•	16 – 10	3-5/8" – 16"	3-1/2"	1"

TRACK (T & DT)

M\W	GAUGES	FLANGE	WEB
T	20 – 10	1-1/4"	2-1/2" – 16"
DT	20 – 10	2" MIN.	2-1/2" – 16"

Notes:
1. Products shown with • symbol will be available subject to minimum order quantities.
2. 10'-0" standard length. Custom orders are available.

WEB KNOCKOUT SIZE AND LOCATION

Marino\WARE studs and joists are manufactured with knockouts in the web to accommodate mechanical and electrical installation. The knockout is provided 12" from the indexed end and the intermediate knockouts are placed at 24" o.c. intervals. Unpunched studs are available upon request.

STUD

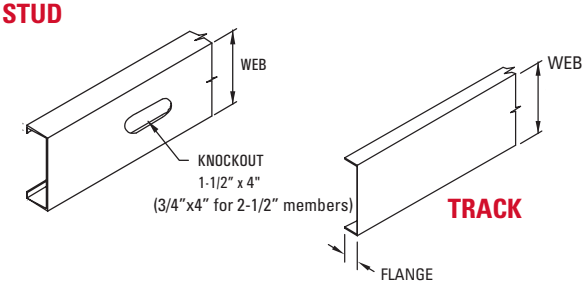

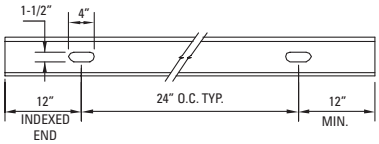

WEB STIFFENERS (JS)

Web Stiffeners are used to provide reinforcement of joist webs to prevent crippling. Web reinforcement is often required by design to enhance the load capacity of joists.

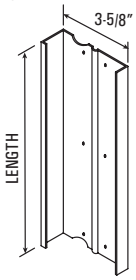

LENGTH: 8", 9 1/4", 10", 11- 1/4, 12", 14" (inside or outside)

WIDTH: 3 5/8"

INSTALLATION:
- Centered within the load or reaction bearing width.
- Installed on the inside or outside of the joist.
- Web stiffeners require full bearing along their supported ends.
- (4-6) #10 -16 screws are required to attach the siffener to the joist web using pre-punched holes.

FLAT STRAP

Tension component of shear wall assemblies. Component of strap & blocking for bridging applications. (*See page 25 for more details.)

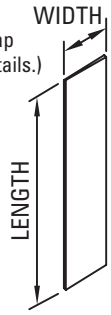

USE:
Tension component of shear wall assemblies.
Component of strap and blocking for bridging application.

AVAILABLE GAUGES: 20, 18, 16, 14, 12 & 10 Gauges.
LENGTH: As required by purchaser.

BRAKE FORMED ACCESSORIES

USE:
Miscellaneous closures, continuous angles, etc.

LENGTH:
10'-0" maximum. Dimensioned product drawing must accompany order.

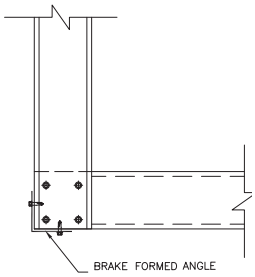

GENERAL NOTES FOR ALL TABLES

1. The information contained in this catalog is intended as a general guide only and all designs shall be verified by a design professional having experience with cold-formed steel design.
2. The data contained in this catalog is based on allowable strength design (ASD) of the 2016 Edition of the North American Specification for the Design of Cold-Formed Steel Structural Members, AISI S100/S2-20).
3. The strength increase based on cold work of forming has been incorporated for flexural strength per Section A3.3.2 of AISI S100.
4. Distortional buckling calculations are based on $K_\phi = 0$.
5. The effective moment of inertia for deflection is calculated at a stress that results in a section modules such that the stress times the section modulus at that stress is equal to the allowable moment. Procedure I of AISI S100 was used for serviceability determination.
6. Various sections may be manufactured with yield stresses of 33 or 50 ksi. The yield stress used for calculations is indicated in the tables.
7. For sections available in both 33 and 50 ksi, the specifier must clearly indicate which yield stress is required. *For example: 362S162-54 (50 ksi).*
8. Sections used as nonstructural members that exceed the 10 psf load limit require an approved G60 minimum coating.
9. When provided, factory punchouts shall:
   - be spaced along the centerline of the web of the framing member.
   - have a center-to-center spacing of not less than 24" (610 mm).
   - have a width not greater than half the member depth or 2-1/2" (63.5 mm), whichever is less.
   - have a length not exceeding 4-1/2" (114 mm).
   - The distance from the center of the last punchout to the end of the member shall not be less than 12" (305 mm), unless otherwise specified.

Any configuration or combination of holes that fits within the punchout width and length limitations shall be permitted. Any configuration or combination of holes that fit within the punchout width and length limitations stated above shall be permitted; other punchout configurations and locations not in compliance with the stated limitations must be approved by a design professional.

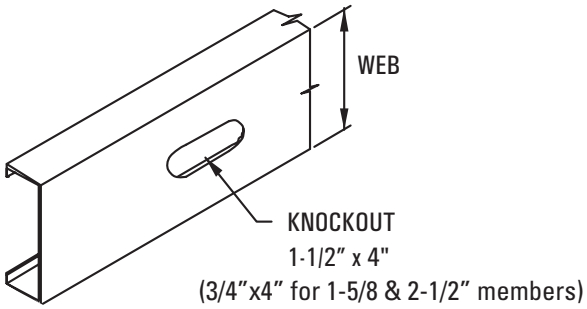

For more information, please contact Marino\WARE® Technical Services at 866.545.1545
This technical information reflects the most current information available and supersedes any and all previous publications effective February 17, 2023 | MW-Cold Formed Catalog | © WARE Industries, Inc., 2023

STRUCTURAL STUD SECTION PROPERTIES

NOTES:
1. The centerline bend radius is based on the inside bend radius shown in the steel thickness table on page 4.
2. Effective section properties incorporate the strength increase due to cold work of forming as applicable per AISI S100 (A3.3.2).
3. Gross section properties are based on the full-unreduced cross section of the joist/stud sections, away from the punchouts.
4. For deflection calculations, use effective moment of inertia.
5. Allowable moment is based on the lesser of local buckling, M_{al}, and distortional buckling, M_{ad}. Distortional buckling is based on an assumed $K\phi$=0.
6. * - Cold work of forming applied.
7. + - Web slenderness ratio exceed 200 and web stiffeners are required at support points and concentrated loads.
8. See General Notes on Page 6.

				GROSS PROPERTIES							EFFECTIVE PROPERTIES						TORSIONAL PROPERTIES						
Member	Lip (in.)	Design Thickness(in.)	F_y (ksi)	Area (in^2)	Weight (lb/ft)	I_x (in^4)	S_x (in^3)	r_x (in.)	I_y (in^4)	r_y (in.)	I_{xd} (in^4)	S_{xe} (in^3)	M_{al} (in-k)	M_{ad} (in-k)	V_{ag} (lb)	V_{anet} (lb)	Jx1000 (in^4)	C_w (in^6)	x_o (in.)	m (in.)	r_o (in.)	ß	L_u (in.)
250S137-33	3/8	0.0346	33	0.197	0.671	0.203	0.163	1.015	0.052	0.515	0.203	0.158	3.11	2.90	975	399	0.079	0.076	-1.141	0.677	1.612	0.499	35.6
250S137-43	3/8	0.0451	33	0.255	0.868	0.261	0.208	1.011	0.067	0.511	0.261	0.205	4.53*	4.02	1265	394	0.173	0.096	-1.129	0.670	1.599	0.501	33.6
250S137-43	3/8	0.0451	50	0.255	0.868	0.261	0.208	1.011	0.067	0.511	0.261	0.197	5.89	5.37	1917	597	0.173	0.096	-1.129	0.670	1.599	0.501	28.7
250S137-54	3/8	0.0566	50	0.316	1.074	0.318	0.255	1.004	0.080	0.504	0.318	0.244	8.22*	7.06	2353	565	0.337	0.115	-1.115	0.663	1.583	0.504	27.1
250S137-68	3/8	0.0713	50	0.390	1.327	0.386	0.309	0.995	0.096	0.495	0.386	0.308	10.7*	9.13	2866	519	0.661	0.138	-1.096	0.653	1.561	0.507	26.8
250S137-97	3/8	0.1017	50	0.533	1.815	0.507	0.406	0.975	0.121	0.476	0.507	0.406	14.8*	14.70	3798	429	1.838	0.176	-1.057	0.633	1.515	0.513	26.5
250S162-33	1/2	0.0346	33	0.223	0.759	0.235	0.188	1.027	0.087	0.624	0.235	0.180	3.55	3.39	975	399	0.089	0.146	-1.470	0.859	1.898	0.401	44.1
250S162-43	1/2	0.0451	33	0.289	0.983	0.302	0.242	1.022	0.111	0.620	0.302	0.240	5.22*	4.70	1265	394	0.196	0.184	-1.457	0.852	1.885	0.402	42.1
250S162-43	1/2	0.0451	50	0.289	0.983	0.302	0.242	1.022	0.111	0.620	0.302	0.217	6.50	6.30	1917	597	0.196	0.184	-1.457	0.852	1.885	0.402	35.7
250S162-54	1/2	0.0566	50	0.358	1.219	0.370	0.296	1.016	0.135	0.613	0.370	0.284	9.42*	8.28	2353	565	0.383	0.223	-1.443	0.845	1.868	0.404	33.9
250S162-68	1/2	0.0713	50	0.443	1.509	0.450	0.360	1.008	0.162	0.605	0.450	0.357	12.1*	10.70	2866	519	0.752	0.268	-1.424	0.835	1.847	0.405	33.7
250S162-97	1/2	0.1017	50	0.610	2.074	0.597	0.478	0.990	0.210	0.587	0.597	0.477	16.9*	16.80	3798	429	2.101	0.346	-1.386	0.815	1.801	0.408	36.9
250S200-33	5/8	0.0346	33	0.258	0.877	0.279	0.223	1.040	0.154	0.773	0.273	0.197	3.90	3.94	975	399	0.103	0.302	-1.926	1.108	2.321	0.312	56.0
250S200-43	5/8	0.0451	33	0.334	1.137	0.358	0.287	1.036	0.198	0.769	0.358	0.278	5.49	5.48	1265	394	0.227	0.382	-1.914	1.101	2.308	0.312	56.1
250S200-43	5/8	0.0451	50	0.334	1.137	0.358	0.287	1.036	0.198	0.769	0.355	0.252	7.56	7.30	1917	597	0.227	0.382	-1.914	1.101	2.308	0.312	45.3
250S200-54	5/8	0.0566	50	0.415	1.412	0.440	0.352	1.030	0.241	0.763	0.440	0.321	9.60	9.64	2353	565	0.443	0.464	-1.899	1.093	2.291	0.313	45.5
250S200-68	5/8	0.0713	50	0.515	1.752	0.538	0.430	1.022	0.293	0.755	0.537	0.417	13.8*	12.60	2866	519	0.872	0.561	-1.881	1.084	2.270	0.313	43.4
250S200-97	5/8	0.1017	50	0.711	2.420	0.719	0.575	1.005	0.386	0.737	0.719	0.575	19.8*	19.70	3798	429	2.452	0.735	-1.843	1.063	2.225	0.314	43.3
250S250-33	5/8	0.0346	33	0.292	0.995	0.331	0.265	1.065	0.262	0.946	0.310	0.214	4.22	4.28	975	399	0.117	0.503	-2.416	1.366	2.804	0.258	66.5
250S250-43	5/8	0.0451	33	0.379	1.290	0.426	0.341	1.060	0.336	0.941	0.423	0.297	5.87	6.01	1265	394	0.257	0.638	-2.404	1.359	2.791	0.258	66.8
250S250-43	5/8	0.0451	50	0.379	1.290	0.426	0.341	1.060	0.336	0.941	0.400	0.265	7.95	7.90	1917	597	0.257	0.638	-2.404	1.359	2.791	0.258	53.9
250S250-54	5/8	0.0566	50	0.471	1.604	0.524	0.419	1.055	0.412	0.935	0.505	0.341	10.22	10.50	2353	565	0.503	0.778	-2.389	1.351	2.774	0.258	54.1
250S250-68	5/8	0.0713	50	0.586	1.994	0.643	0.514	1.047	0.503	0.926	0.638	0.446	13.36	13.90	2866	519	0.993	0.944	-2.371	1.341	2.752	0.258	54.5
250S250-97	5/8	0.1017	50	0.813	2.766	0.865	0.692	1.031	0.670	0.908	0.865	0.664	22.3*	20.60	3798	429	2.803	1.245	-2.332	1.320	2.707	0.258	52.4
362S137-33	3/8	0.0346	33	0.236	0.804	0.479	0.264	1.424	0.059	0.501	0.479	0.232	4.59	4.45	1024	521	0.094	0.165	-1.003	0.615	1.813	0.694	34.7
362S137-43	3/8	0.0451	33	0.306	1.041	0.616	0.340	1.419	0.076	0.497	0.616	0.320	6.32	6.25	1739	676	0.207	0.208	-0.991	0.608	1.801	0.697	34.6
362S137-43	3/8	0.0451	50	0.306	1.041	0.616	0.340	1.419	0.076	0.497	0.616	0.292	8.73	8.27	2141	832	0.207	0.208	-0.991	0.608	1.801	0.697	28.0
362S137-54	3/8	0.0566	50	0.379	1.291	0.756	0.417	1.412	0.091	0.490	0.756	0.381	11.42	11.00	3372	1016	0.405	0.251	-0.978	0.601	1.785	0.700	27.9
362S137-68	3/8	0.0713	50	0.470	1.600	0.923	0.509	1.401	0.109	0.481	0.922	0.493	14.77	14.50	4370	1004	0.797	0.302	-0.959	0.592	1.765	0.704	27.8
362S137-97	3/8	0.1017	50	0.648	2.204	1.229	0.678	1.378	0.138	0.461	1.229	0.662	24.1*	24.10	5943	875	2.233	0.390	-0.922	0.573	1.721	0.713	25.1
362S162-33	1/2	0.0346	33	0.262	0.892	0.551	0.304	1.450	0.099	0.616	0.551	0.268	5.29	5.18	1024	521	0.105	0.297	-1.308	0.789	2.048	0.592	42.6
362S162-43	1/2	0.0451	33	0.340	1.156	0.710	0.392	1.445	0.127	0.611	0.710	0.372	7.34	7.27	1739	676	0.230	0.376	-1.297	0.782	2.036	0.594	42.5
362S162-43	1/2	0.0451	50	0.340	1.156	0.710	0.392	1.445	0.127	0.611	0.710	0.321	9.62	9.64	2141	832	0.230	0.376	-1.297	0.782	2.036	0.594	34.4
362S162-54	1/2	0.0566	50	0.422	1.436	0.873	0.482	1.438	0.154	0.604	0.873	0.444	13.28	12.80	3372	1016	0.451	0.457	-1.282	0.774	2.020	0.597	34.4
362S162-68	1/2	0.0713	50	0.524	1.782	1.069	0.590	1.429	0.186	0.596	1.069	0.574	17.18	16.90	4370	1004	0.887	0.552	-1.264	0.765	1.999	0.600	34.4
362S162-97	1/2	0.1017	50	0.724	2.463	1.435	0.792	1.408	0.241	0.577	1.435	0.776	27.5*	27.50	5943	875	2.496	0.723	-1.226	0.745	1.954	0.606	31.5
362S162-118	1/2	0.1242	50	0.863	2.938	1.673	0.923	1.392	0.274	0.563	1.673	0.904	33.1*	33.10	6996	784	4.439	0.828	-1.198	0.731	1.921	0.611	31.1
362S200-33	5/8	0.0346	33	0.297	1.010	0.648	0.358	1.478	0.177	0.772	0.637	0.294	5.81	5.96	1024	521	0.118	0.577	-1.741	1.030	2.411	0.478	53.6
362S200-43	5/8	0.0451	33	0.385	1.310	0.836	0.461	1.474	0.227	0.767	0.836	0.427	8.43	8.38	1739	676	0.261	0.734	-1.729	1.024	2.398	0.480	53.5
362S200-43	5/8	0.0451	50	0.385	1.310	0.836	0.461	1.474	0.227	0.767	0.830	0.377	11.29	11.10	2141	832	0.261	0.734	-1.729	1.024	2.398	0.480	43.3
362S200-54	5/8	0.0566	50	0.478	1.628	1.030	0.568	1.467	0.277	0.761	1.030	0.490	14.66	14.80	3372	1016	0.511	0.896	-1.715	1.016	2.382	0.482	43.3
362S200-68	5/8	0.0713	50	0.595	2.025	1.266	0.698	1.458	0.337	0.753	1.265	0.666	19.95	19.60	4370	1004	1.008	1.089	-1.696	1.006	2.360	0.484	43.3
362S200-97	5/8	0.1017	50	0.826	2.809	1.712	0.944	1.440	0.446	0.735	1.712	0.929	32.0*	32.00	5943	875	2.847	1.441	-1.658	0.986	2.316	0.487	40.5
362S200-118	5/8	0.1242	50	0.988	3.360	2.007	1.108	1.426	0.514	0.721	2.007	1.088	38.6*	38.60	6996	784	5.078	1.664	-1.629	0.971	2.282	0.490	40.2
362S250-33	5/8	0.0346	33	0.331	1.127	0.760	0.419	1.514	0.299	0.951	0.716	0.315	6.23	6.36	1024	521	0.132	0.965	-2.211	1.284	2.844	0.395	64.2
362S250-43	5/8	0.0451	33	0.430	1.463	0.980	0.541	1.510	0.385	0.946	0.973	0.449	8.88	9.02	1739	676	0.292	1.230	-2.199	1.277	2.830	0.396	64.1
362S250-43	5/8	0.0451	50	0.430	1.463	0.980	0.541	1.510	0.385	0.946	0.921	0.390	11.69	11.80	2141	832	0.292	1.230	-2.199	1.277	2.830	0.396	51.9
362S250-54	5/8	0.0566	50	0.535	1.821	1.210	0.668	1.504	0.473	0.940	1.161	0.514	15.40	15.80	3372	1016	0.571	1.506	-2.184	1.269	2.813	0.397	52.0
362S250-68	5/8	0.0713	50	0.666	2.267	1.491	0.822	1.496	0.578	0.931	1.475	0.689	20.63	21.20	4370	1004	1.129	1.837	-2.165	1.259	2.791	0.398	52.0
362S250-97	5/8	0.1017	50	0.927	3.156	2.027	1.119	1.479	0.773	0.913	2.027	1.046	35.2*	32.40	5943	875	3.197	2.452	-2.126	1.239	2.746	0.401	49.3
362S250-118	5/8	0.1242	50	1.11	3.783	2.388	1.317	1.466	0.898	0.899	2.388	1.259	43.3*	44.70	6996	784	5.716	2.849	-2.097	1.224	2.712	0.402	49.1
400S137-33	3/8	0.0346	33	0.249	0.848	0.603	0.302	1.556	0.061	0.496	0.603	0.259	5.12	4.97	976	595	0.099	0.204	-0.965	0.597	1.897	0.741	34.5
400S137-43	3/8	0.0451	33	0.323	1.099	0.776	0.388	1.551	0.078	0.491	0.776	0.359	7.09	7.02	1739	810	0.219	0.257	-0.954	0.591	1.886	0.744	34.3
400S137-43	3/8	0.0451	50	0.323	1.099	0.776	0.388	1.551	0.078	0.491	0.776	0.326	9.75	9.27	2141	997	0.219	0.257	-0.954	0.591	1.886	0.744	27.8
400S137-54	3/8	0.0566	50	0.401	1.363	0.953	0.477	1.543	0.094	0.484	0.953	0.428	12.82	12.40	3372	1223	0.428	0.311	-0.940	0.583	1.870	0.747	27.7
400S137-68	3/8	0.0713	50	0.497	1.691	1.165	0.583	1.531	0.112	0.475	1.165	0.558	16.70	16.50	4871	1356	0.842	0.375	-0.922	0.574	1.849	0.751	27.6
400S162-33	1/2	0.0346	33	0.275	0.936	0.692	0.346	1.586	0.103	0.611	0.692	0.299	5.91	5.80	976	595	0.110	0.363	-1.263	0.768	2.118	0.644	42.3
400S162-43	1/2	0.0451	33	0.357	1.214	0.892	0.446	1.581	0.131	0.606	0.892	0.417	8.23	8.16	1739	810	0.242	0.460	-1.252	0.761	2.106	0.647	42.2
400S162-43	1/2	0.0451	50	0.357	1.214	0.892	0.446	1.581	0.131	0.606	0.892	0.359	10.75	10.80	2141	997	0.242	0.460	-1.252	0.761	2.106	0.647	34.2
400S162-54	1/2	0.0566	50	0.443	1.508	1.098	0.549	1.574	0.159	0.600	1.098	0.497	14.89	14.40	3372	1223	0.473	0.560	-1.238	0.754	2.090	0.649	34.1
400S162-68	1/2	0.0713	50	0.550	1.873	1.346	0.673	1.564	0.192	0.591	1.346	0.648	19.41	19.10	4871	1356	0.933	0.677	-1.220	0.745	2.069	0.653	34.0
400S162-97	1/2	0.1017	50	0.762	2.593	1.813	0.907	1.542	0.250	0.572	1.813	0.892	31.6*	31.60	6658	1207	2.627	0.889	-1.182	0.725	2.026	0.660	31.1
400S162-118	1/2	0.1242	50	0.910	3.096	2.119	1.059	1.526	0.283	0.558	2.118	1.042	38.1*	38.10	7869	1102	4.679	1.020	-1.154	0.711	1.993	0.665	30.7

STRUCTURAL STUD SECTION PROPERTIES

				GROSS PROPERTIES							EFFECTIVE PROPERTIES						TORSIONAL PROPERTIES						
Member	Lip (in.)	Design Thickness(in.)	F_y (ksi)	Area (in^2)	Weight (lb/ft)	I_x (in^4)	S_x (in^3)	r_x (in.)	I_y (in^4)	r_y (in.)	I_{xd} (in^4)	S_{xe} (in^3)	M_{al} (in-k)	M_{ad} (in-k)	V_{ag} (lb)	V_{anet} (lb)	Jx1000 (in^4)	C_w (in^6)	x_o (in.)	m (in.)	r_o (in.)	ß	L_u (in.)
400S200-33	5/8	0.0346	33	0.310	1.054	0.812	0.406	1.619	0.183	0.769	0.798	0.329	6.49	6.65	976	595	0.124	0.697	-1.688	1.007	2.462	0.530	53.1
400S200-43	5/8	0.0451	33	0.402	1.367	1.048	0.524	1.615	0.235	0.764	1.047	0.478	9.45	9.38	1739	810	0.272	0.886	-1.676	1.000	2.450	0.532	53.0
400S200-43	5/8	0.0451	50	0.402	1.367	1.048	0.524	1.615	0.235	0.764	1.040	0.422	12.63	12.40	2141	997	0.272	0.886	-1.676	1.000	2.450	0.532	43.0
400S200-54	5/8	0.0566	50	0.500	1.700	1.292	0.646	1.608	0.287	0.758	1.292	0.549	16.43	16.60	3372	1223	0.534	1.083	-1.662	0.993	2.433	0.534	42.9
400S200-68	5/8	0.0713	50	0.622	2.116	1.590	0.795	1.599	0.349	0.750	1.589	0.751	22.47	22.00	4871	1356	1.054	1.318	-1.643	0.983	2.412	0.536	42.9
400S200-97	5/8	0.1017	50	0.864	2.939	2.155	1.078	1.580	0.463	0.732	2.155	1.063	36.7*	36.70	6658	1207	2.978	1.749	-1.605	0.963	2.368	0.541	40.0
400S200-118	5/8	0.1242	50	1.03	3.519	2.533	1.266	1.565	0.533	0.718	2.532	1.249	44.2*	44.30	7869	1102	5.317	2.024	-1.577	0.948	2.335	0.544	39.6
400S250-33	5/8	0.0346	33	0.344	1.172	0.948	0.474	1.660	0.310	0.949	0.894	0.352	6.95	7.07	976	595	0.137	1.165	-2.151	1.259	2.878	0.441	63.7
400S250-43	5/8	0.0451	33	0.447	1.521	1.224	0.612	1.655	0.399	0.945	1.215	0.503	9.93	10.00	1739	810	0.303	1.486	-2.139	1.252	2.865	0.443	63.7
400S250-43	5/8	0.0451	50	0.447	1.521	1.224	0.612	1.655	0.399	0.945	1.151	0.436	13.06	13.10	2141	997	0.303	1.486	-2.139	1.252	2.865	0.443	51.6
400S250-54	5/8	0.0566	50	0.556	1.893	1.512	0.756	1.649	0.490	0.938	1.450	0.576	17.24	17.60	3372	1223	0.594	1.821	-2.124	1.244	2.848	0.444	51.6
400S250-68	5/8	0.0713	50	0.693	2.358	1.865	0.932	1.640	0.599	0.929	1.843	0.775	23.19	23.70	4871	1356	1.174	2.225	-2.105	1.235	2.826	0.445	51.6
400S250-97	5/8	0.1017	50	0.965	3.285	2.542	1.271	1.623	0.801	0.911	2.542	1.191	40.1*	36.40	6658	1207	3.329	2.978	-2.066	1.214	2.781	0.448	48.8
400S250-118	5/8	0.1242	50	1.16	3.941	2.999	1.500	1.609	0.932	0.897	2.999	1.436	49.4*	44.40	7869	1102	5.956	3.467	-2.037	1.199	2.746	0.450	48.5
600S137-33	3/8	0.0346	33	0.318	1.083	1.582	0.527	2.230	0.069	0.464	1.540	0.455	8.98	7.76	638	638	0.127	0.500	-0.807	0.519	2.416	0.889	33.5
600S137-43	3/8	0.0451	33	0.413	1.405	2.042	0.681	2.224	0.087	0.459	2.036	0.645	12.74	11.20	1415	1240	0.280	0.633	-0.796	0.513	2.406	0.890	33.2
600S137-43	3/8	0.0451	50	0.413	1.405	2.042	0.681	2.224	0.087	0.459	1.999	0.579	17.33	14.60	1415	1240	0.280	0.633	-0.796	0.513	2.406	0.890	27.0
600S137-54	3/8	0.0566	50	0.514	1.749	2.518	0.839	2.214	0.105	0.452	2.517	0.777	23.26	19.90	2822	1947	0.549	0.769	-0.784	0.506	2.392	0.893	26.8
600S137-68	3/8	0.0713	50	0.640	2.176	3.095	1.032	2.200	0.126	0.443	3.094	1.030	30.84	26.90	5350	2879	1.084	0.930	-0.768	0.497	2.372	0.895	26.5
600S137-97	3/8	0.1017	50	0.889	3.026	4.189	1.396	2.171	0.159	0.423	4.188	1.396	50.8*	41.40	10472	3805	3.066	1.216	-0.734	0.480	2.330	0.901	23.6
600S162-33	1/2	0.0346	33	0.344	1.172	1.793	0.598	2.282	0.116	0.581	1.793	0.577	11.41	9.08	638	638	0.137	0.862	-1.072	0.677	2.588	0.828	41.1
600S162-43	1/2	0.0451	33	0.447	1.521	2.316	0.772	2.277	0.148	0.576	2.316	0.767	16.7*	13.00	1415	1240	0.303	1.095	-1.062	0.670	2.577	0.830	39.0
600S162-43	1/2	0.0451	50	0.447	1.521	2.316	0.772	2.277	0.148	0.576	2.316	0.705	21.12	17.00	1415	1240	0.303	1.095	-1.062	0.670	2.577	0.830	33.2
600S162-54	1/2	0.0566	50	0.556	1.893	2.861	0.954	2.268	0.181	0.570	2.860	0.915	30.3*	23.00	2822	1947	0.594	1.337	-1.049	0.663	2.563	0.833	31.4
600S162-68	1/2	0.0713	50	0.693	2.358	3.525	1.175	2.255	0.218	0.561	3.525	1.164	39.5*	31.10	5350	2879	1.174	1.626	-1.032	0.655	2.543	0.835	30.8
600S162-97	1/2	0.1017	50	0.965	3.285	4.798	1.599	2.229	0.283	0.542	4.797	1.599	56.7*	47.50	10472	3805	3.329	2.153	-0.997	0.636	2.501	0.841	29.8
600S162-118	1/2	0.1242	50	1.16	3.941	5.654	1.885	2.209	0.322	0.527	5.653	1.884	68.9*	68.50	12526	3622	5.956	2.487	-0.971	0.623	2.470	0.846	29.1
600S200-33	5/8	0.0346	33	0.379	1.289	2.075	0.692	2.340	0.209	0.743	2.043	0.621	12.28	10.40	638	638	0.151	1.593	-1.457	0.901	2.855	0.740	51.6
600S200-43	5/8	0.0451	33	0.492	1.674	2.683	0.894	2.335	0.268	0.739	2.683	0.873	17.24	14.90	1415	1240	0.334	2.033	-1.446	0.894	2.844	0.742	51.4
600S200-43	5/8	0.0451	50	0.492	1.674	2.683	0.894	2.335	0.268	0.739	2.666	0.807	24.17	19.40	1415	1240	0.334	2.033	-1.446	0.894	2.844	0.742	41.7
600S200-54	5/8	0.0566	50	0.613	2.086	3.320	1.107	2.327	0.329	0.732	3.319	1.015	30.39	26.30	2822	1947	0.655	2.493	-1.432	0.887	2.829	0.744	41.6
600S200-68	5/8	0.0713	50	0.764	2.601	4.101	1.367	2.316	0.400	0.723	4.100	1.317	43.7*	35.40	5350	2879	1.295	3.047	-1.415	0.878	2.809	0.746	39.3
600S200-97	5/8	0.1017	50	1.07	3.631	5.613	1.871	2.293	0.530	0.705	5.612	1.871	64.5*	55.00	10472	3805	3.679	4.080	-1.378	0.859	2.767	0.752	38.3
600S200-118	5/8	0.1242	50	1.28	4.364	6.643	2.214	2.276	0.612	0.691	6.641	2.214	78.4*	78.00	12526	3622	6.594	4.753	-1.351	0.845	2.735	0.756	37.6
600S250-43	5/8	0.0451	33	0.537	1.828	3.083	1.028	2.396	0.458	0.923	3.062	0.918	18.14	15.70	1415	1240	0.364	3.411	-1.874	1.136	3.179	0.652	62.4
600S250-43	5/8	0.0451	50	0.537	1.828	3.083	1.028	2.396	0.458	0.923	2.912	0.818	24.51	20.30	1415	1240	0.364	3.411	-1.874	1.136	3.179	0.652	50.6
600S250-54	5/8	0.0566	50	0.670	2.278	3.820	1.273	2.389	0.562	0.917	3.663	1.069	32.00	27.60	2822	1947	0.715	4.194	-1.860	1.129	3.163	0.654	50.5
600S250-68	5/8	0.0713	50	0.836	2.843	4.728	1.576	2.379	0.688	0.908	4.667	1.386	41.49	37.50	5350	2879	1.416	5.146	-1.842	1.119	3.142	0.657	50.4
600S250-97	5/8	0.1017	50	1.17	3.977	6.497	2.166	2.358	0.923	0.889	6.496	2.063	69.4*	59.00	10472	3805	4.030	6.947	-1.803	1.100	3.099	0.661	47.3
600S250-118	5/8	0.1242	50	1.41	4.787	7.715	2.572	2.342	1.076	0.874	7.713	2.498	85.9*	75.20	12526	3622	7.233	8.142	-1.775	1.085	3.066	0.665	46.7
600S300-54	5/8	0.0566	50	0.726	2.471	4.320	1.440	2.439	0.875	1.098	3.939	1.106	33.13	28.50	2822	1947	0.775	6.452	-2.299	1.372	3.527	0.575	59.1
600S300-68	5/8	0.0713	50	0.907	3.086	5.354	1.785	2.430	1.075	1.089	5.064	1.446	43.30	38.90	5350	2879	1.537	7.937	-2.280	1.363	3.506	0.577	58.9
600S300-97	5/8	0.1017	50	1.27	4.323	7.382	2.461	2.410	1.454	1.070	7.251	2.247	67.28	62.00	10472	3805	4.381	10.776	-2.241	1.343	3.461	0.581	58.8
600S300-118	5/8	0.1242	50	1.53	5.209	8.787	2.929	2.396	1.704	1.055	8.785	2.797	94.2*	79.70	12526	3622	7.872	12.684	-2.212	1.328	3.427	0.583	55.3
800S137-33+	3/8	0.0346	33	0.388	1.319	3.199	0.800	2.873	0.073	0.435	2.972	0.622	12.29	10.20	474	474	0.155	0.957	-0.696	0.460	2.988	0.946	32.5
800S137-43	3/8	0.0451	33	0.503	1.712	4.135	1.034	2.866	0.093	0.430	3.981	0.896	17.70	15.00	1051	1051	0.341	1.214	-0.687	0.454	2.979	0.947	32.2
800S137-43	3/8	0.0451	50	0.503	1.712	4.135	1.034	2.866	0.093	0.430	3.872	0.795	23.80	19.30	1051	1051	0.341	1.214	-0.687	0.454	2.979	0.947	26.2
800S137-54	3/8	0.0566	50	0.627	2.134	5.111	1.278	2.855	0.112	0.423	4.940	1.083	32.42	26.80	2091	2091	0.670	1.478	-0.676	0.448	2.964	0.948	25.9
800S137-68	3/8	0.0713	50	0.782	2.661	6.305	1.576	2.839	0.134	0.414	6.265	1.468	43.96	37.10	4220	3367	1.325	1.789	-0.661	0.440	2.944	0.950	25.6
800S137-97	3/8	0.1017	50	1.09	3.718	8.600	2.150	2.806	0.170	0.394	8.597	2.149	64.35	59.70	10885	5938	3.767	2.349	-0.630	0.423	2.902	0.953	25.0
800S162-33+	1/2	0.0346	33	0.413	1.407	3.583	0.896	2.944	0.125	0.550	3.361	0.710	14.03	12.20	474	474	0.165	1.630	-0.936	0.607	3.138	0.911	40.1
800S162-43	1/2	0.0451	33	0.537	1.828	4.635	1.159	2.938	0.160	0.546	4.483	1.019	20.14	17.60	1051	1051	0.364	2.076	-0.926	0.601	3.128	0.912	39.8
800S162-43	1/2	0.0451	50	0.537	1.828	4.635	1.159	2.938	0.160	0.546	4.377	0.866	25.93	22.80	1051	1051	0.364	2.076	-0.926	0.601	3.128	0.912	32.3
800S162-54	1/2	0.0566	50	0.670	2.278	5.737	1.434	2.927	0.194	0.539	5.568	1.229	36.79	31.30	2091	2091	0.715	2.539	-0.914	0.594	3.114	0.914	32.1
800S162-68	1/2	0.0713	50	0.836	2.843	7.091	1.773	2.913	0.235	0.530	7.052	1.663	49.80	42.90	4220	3367	1.416	3.093	-0.898	0.586	3.094	0.916	31.9
800S162-97	1/2	0.1017	50	1.17	3.977	9.716	2.429	2.883	0.305	0.511	9.713	2.428	72.70	68.40	10885	5938	4.030	4.114	-0.866	0.568	3.053	0.920	31.4
800S162-118	1/2	0.1242	50	1.41	4.787	11.507	2.877	2.860	0.347	0.496	11.504	2.876	105*	105.00	16235	7115	7.233	4.766	-0.842	0.556	3.023	0.922	28.0
800S200-43	5/8	0.0451	33	0.582	1.981	5.303	1.326	3.018	0.292	0.708	5.302	1.293	25.55	20.30	1051	1051	0.395	3.797	-1.277	0.811	3.353	0.855	50.3
800S200-43	5/8	0.0451	50	0.582	1.981	5.303	1.326	3.018	0.292	0.708	5.272	1.066	31.91	26.30	1051	1051	0.395	3.797	-1.277	0.811	3.353	0.855	40.9
800S200-54	5/8	0.0566	50	0.726	2.471	6.574	1.644	3.009	0.357	0.701	6.572	1.499	44.88	36.00	2091	2091	0.775	4.663	-1.265	0.804	3.338	0.856	40.7
800S200-68	5/8	0.0713	50	0.907	3.086	8.142	2.036	2.996	0.435	0.692	8.140	1.964	65.2*	49.10	4220	3367	1.537	5.712	-1.248	0.796	3.319	0.859	38.4
800S200-97	5/8	0.1017	50	1.27	4.323	11.206	2.801	2.970	0.576	0.674	11.203	2.801	96.6*	77.90	10885	5938	4.381	7.684	-1.214	0.777	3.278	0.863	37.2
800S200-118	5/8	0.1242	50	1.53	5.209	13.319	3.330	2.950	0.666	0.659	13.315	3.329	118*	99.30	16235	7115	7.872	8.981	-1.188	0.764	3.248	0.866	36.5
800S250-43	5/8	0.0451	33	0.627	2.134	6.017	1.504	3.097	0.500	0.893	5.979	1.314	25.96	21.40	1051	1051	0.425	6.374	-1.675	1.043	3.632	0.787	61.5
800S250-43	5/8	0.0451	50	0.627	2.134	6.017	1.504	3.097	0.500	0.893	5.693	1.080	32.32	27.50	1051	1051	0.425	6.374	-1.675	1.043	3.632	0.787	49.9
800S250-54	5/8	0.0566	50	0.783	2.663	7.467	1.867	3.089	0.614	0.886	7.171	1.525	45.67	37.70	2091	2091	0.836	7.850	-1.661	1.036	3.617	0.789	49.8
800S250-68	5/8	0.0713	50	0.978	3.329	9.263	2.316	3.077	0.752	0.877	9.141	2.059	61.65	51.70	4220	3367	1.658	9.653	-1.644	1.027	3.597	0.791	49.6
800S250-97	5/8	0.1017	50	1.37	4.670	12.792	3.198	3.053	1.009	0.857	12.789	3.053	103*	82.90	10885	5938	4.731	13.091	-1.607	1.008	3.555	0.796	46.4
800S250-118	5/8	0.1242	50	1.66	5.632	15.245	3.811	3.035	1.176	0.843	15.241	3.706	128*	107.00	16235	7115	8.510	15.395	-1.580	0.994	3.524	0.799	45.6
800S300-54	5/8	0.0566	50	0.839	2.856	8.360	2.090	3.156	0.959	1.069	7.666	1.535	45.97	38.80	2091	2091	0.896	12.076	-2.073	1.271	3.924	0.721	58.6
800S300-68	5/8	0.0713	50	1.05	3.571	10.383	2.596	3.145	1.179	1.060	9.842	2.145	64.21	53.40	4220	3367	1.778	14.888	-2.055	1.262	3.904	0.723	58.4
800S300-97	5/8	0.1017	50	1.47	5.016	14.378	3.594	3.123	1.595	1.040	14.120	3.304	98.91	86.30	10885	5938	5.082	20.304	-2.017	1.243	3.861	0.727	58.1
800S300-118	5/8	0.1242	50	1.78	6.055	17.170	4.293	3.106	1.871	1.026	17.167	4.108	138*	112.00	16235	7115	9.149	23.979	-1.989	1.229	3.829	0.730	54.5

NOTE: See page 7 for Table Notes.

For more information, please contact Marino\WARE® Technical Services at 866.545.1545
This technical information reflects the most current information available and supersedes any and all
previous publications effective February 17, 2023 | MW-Cold Formed Catalog | © WARE Industries, Inc., 2023

STRUCTURAL STUD SECTION PROPERTIES

				GROSS PROPERTIES							EFFECTIVE PROPERTIES						TORSIONAL PROPERTIES						
Member	Lip (in.)	Design Thickness(in.)	F_y (ksi)	Area (in^2)	Weight (lb/ft)	I_x (in^4)	S_x (in^3)	r_x (in.)	I_y (in^4)	r_y (in.)	I_{xd} (in^4)	S_{xe} (in^3)	M_{al} (in-k)	M_{ad} (in-k)	V_{ag} (lb)	V_{anet} (lb)	Jx1000 (in^4)	C_w (in^6)	x_o (in.)	m (in.)	r_o (in.)	ß	L_u (in.)
1000S162-33+	1/2	0.0346	33	0.483	1.642	6.200	1.240	3.584	0.132	0.522	5.558	0.900	17.79	14.80	377	377	0.193	2.692	-0.832	0.550	3.716	0.950	39.1
1000S162-43+	1/2	0.0451	33	0.627	2.134	8.028	1.606	3.577	0.168	0.518	7.479	1.302	25.74	21.70	836	836	0.425	3.430	-0.823	0.545	3.707	0.951	38.8
1000S162-43+	1/2	0.0451	50	0.627	2.134	8.028	1.606	3.577	0.168	0.518	7.255	1.099	32.91	27.80	836	836	0.425	3.430	-0.823	0.545	3.707	0.951	31.5
1000S162-54	1/2	0.0566	50	0.783	2.663	9.953	1.991	3.566	0.204	0.511	9.310	1.572	47.06	38.70	1660	1660	0.836	4.198	-0.812	0.538	3.693	0.952	31.3
1000S162-68	1/2	0.0713	50	0.978	3.329	12.329	2.466	3.550	0.247	0.502	11.919	2.155	64.51	53.80	3345	3345	1.658	5.121	-0.798	0.531	3.673	0.953	31.0
1000S162-97	1/2	0.1017	50	1.37	4.670	16.972	3.394	3.517	0.320	0.483	16.966	3.269	97.89	88.00	9862	7175	4.731	6.827	-0.768	0.514	3.632	0.955	30.4
1000S162-118	1/2	0.1242	50	1.66	5.632	20.175	4.035	3.491	0.364	0.469	20.168	4.034	120.77	115.00	16235	9536	8.510	7.924	-0.746	0.502	3.601	0.957	30.0
1000S200-43+	5/8	0.0451	33	0.672	2.288	9.088	1.818	3.676	0.309	0.677	8.550	1.470	29.05	25.40	836	836	0.456	6.236	-1.147	0.743	3.910	0.914	49.3
1000S200-43+	5/8	0.0451	50	0.672	2.288	9.088	1.818	3.676	0.309	0.677	8.273	1.270	38.03	32.70	836	836	0.456	6.236	-1.147	0.743	3.910	0.914	40.0
1000S200-54	5/8	0.0566	50	0.839	2.856	11.281	2.256	3.666	0.378	0.671	10.651	1.705	51.05	45.10	1660	1660	0.896	7.665	-1.135	0.737	3.896	0.915	39.8
1000S200-68	5/8	0.0713	50	1.05	3.571	13.998	2.800	3.652	0.460	0.662	13.594	2.420	72.46	62.20	3345	3345	1.778	9.401	-1.120	0.729	3.877	0.917	39.6
1000S200-97	5/8	0.1017	50	1.47	5.016	19.341	3.868	3.622	0.610	0.643	19.335	3.741	112.00	101.00	9862	7175	5.082	12.679	-1.087	0.711	3.836	0.920	39.0
1000S200-118	5/8	0.1242	50	1.78	6.055	23.058	4.612	3.600	0.704	0.629	23.051	4.610	138.03	131.00	16235	9536	9.149	14.848	-1.064	0.699	3.806	0.922	38.7
1000S250-43+	5/8	0.0451	33	0.717	2.441	10.205	2.041	3.771	0.531	0.860	10.145	1.617	31.95	26.80	836	836	0.486	10.481	-1.518	0.965	4.155	0.867	60.7
1000S250-43+	5/8	0.0451	50	0.717	2.441	10.205	2.041	3.771	0.531	0.860	9.136	1.342	40.19	34.30	836	836	0.486	10.481	-1.518	0.965	4.155	0.867	49.3
1000S250-54	5/8	0.0566	50	0.896	3.049	12.680	2.536	3.762	0.653	0.854	12.202	1.879	56.27	47.60	1660	1660	0.957	12.922	-1.505	0.958	4.141	0.868	49.1
1000S250-68	5/8	0.0713	50	1.12	3.814	15.755	3.151	3.749	0.799	0.844	15.553	2.769	82.90	65.70	3345	3345	1.899	15.909	-1.488	0.950	4.121	0.870	48.8
1000S250-97	5/8	0.1017	50	1.58	5.362	21.832	4.366	3.722	1.073	0.825	21.826	4.181	141*	107.00	9862	7175	5.432	21.632	-1.454	0.932	4.080	0.873	45.6
1000S250-118	5/8	0.1242	50	1.90	6.477	26.086	5.217	3.702	1.250	0.810	26.079	5.082	175*	140.00	16235	9536	9.788	25.490	-1.428	0.918	4.050	0.876	44.8
1000S300-54	5/8	0.0566	50	0.953	3.241	14.079	2.816	3.845	1.024	1.037	12.824	1.903	56.96	49.00	1660	1660	1.017	19.888	-1.892	1.185	4.409	0.816	58.0
1000S300-68	5/8	0.0713	50	1.19	4.056	17.512	3.502	3.833	1.258	1.027	16.643	2.803	83.91	68.00	3345	3345	2.020	24.551	-1.874	1.176	4.389	0.818	57.8
1000S300-97	5/8	0.1017	50	1.68	5.708	24.323	4.865	3.808	1.702	1.007	23.895	4.498	134.68	111.00	9862	7175	5.783	33.570	-1.838	1.158	4.347	0.821	57.4
1000S300-118	5/8	0.1242	50	2.03	6.900	29.114	5.823	3.789	1.997	0.992	29.108	5.586	188*	146.00	16235	9536	10.426	39.725	-1.811	1.144	4.316	0.824	53.8
1000S350-54	1	0.0566	50	1.05	3.578	16.223	3.245	3.928	1.768	1.297	15.099	2.328	69.70	60.70	1660	1660	1.123	36.575	-2.546	1.566	4.857	0.725	72.2
1000S350-68	1	0.0713	50	1.32	4.481	20.208	4.042	3.917	2.185	1.288	19.745	3.418	102.33	83.70	3345	3345	2.232	45.277	-2.529	1.557	4.837	0.727	72.0
1000S350-97	1	0.1017	50	1.86	6.313	28.152	5.630	3.895	2.992	1.270	28.146	5.118	153.24	136.00	9862	7175	6.397	62.280	-2.492	1.538	4.795	0.730	71.6
1000S350-118	1	0.1242	50	2.25	7.639	33.777	6.755	3.879	3.543	1.256	33.770	6.426	213*	176.00	16235	9536	11.544	74.030	-2.465	1.524	4.764	0.732	67.8
1200S162-43+	1/2	0.0451	33	0.717	2.441	12.676	2.113	4.203	0.174	0.493	11.338	1.585	31.32	25.10	694	694	0.486	5.177	-0.742	0.499	4.297	0.970	37.8
1200S162-43+	1/2	0.0451	50	0.717	2.441	12.676	2.113	4.203	0.174	0.493	10.943	1.332	39.88	32.00	694	694	0.486	5.177	-0.742	0.499	4.297	0.970	30.7
1200S162-54+	1/2	0.0566	50	0.896	3.049	15.735	2.623	4.191	0.212	0.486	14.138	1.914	57.31	45.00	1377	1377	0.957	6.340	-0.732	0.493	4.282	0.971	30.5
1200S162-68	1/2	0.0713	50	1.12	3.814	19.524	3.254	4.174	0.255	0.477	18.256	2.645	79.19	63.30	2770	2770	1.899	7.739	-0.719	0.485	4.262	0.972	30.2
1200S162-97	1/2	0.1017	50	1.58	5.362	26.974	4.496	4.138	0.332	0.459	26.610	4.091	122.49	106.00	8145	7410	5.432	10.331	-0.691	0.470	4.220	0.973	29.5
1200S162-118	1/2	0.1242	50	1.90	6.477	32.155	5.359	4.110	0.377	0.445	32.143	5.168	154.73	140.00	14982	11034	9.788	12.002	-0.670	0.459	4.188	0.974	29.0
1200S200-54+	5/8	0.0566	50	0.953	3.241	17.668	2.945	4.307	0.394	0.643	16.104	2.073	62.06	53.10	1377	1377	1.017	11.550	-1.032	0.681	4.475	0.947	39.0
1200S200-68	5/8	0.0713	50	1.19	4.056	21.954	3.659	4.291	0.479	0.634	20.708	2.963	88.71	74.00	2770	2770	2.020	14.176	-1.017	0.673	4.456	0.948	38.7
1200S200-97	5/8	0.1017	50	1.68	5.708	30.425	5.071	4.259	0.635	0.615	30.066	4.660	139.51	122.00	8145	7410	5.783	19.150	-0.987	0.656	4.415	0.950	38.1
1200S200-118	5/8	0.1242	50	2.03	6.900	36.357	6.060	4.234	0.733	0.601	36.345	5.865	175.59	160.00	14982	11034	10.426	22.451	-0.964	0.644	4.384	0.952	37.7
1200S250-54+	5/8	0.0566	50	1.01	3.434	19.686	3.281	4.417	0.683	0.823	17.261	2.149	64.34	56.60	1377	1377	1.078	19.505	-1.378	0.892	4.699	0.914	48.3
1200S250-68	5/8	0.0713	50	1.26	4.299	24.490	4.082	4.403	0.836	0.813	22.905	3.007	90.04	79.00	2770	2770	2.141	24.034	-1.362	0.884	4.680	0.915	48.1
1200S250-97	5/8	0.1017	50	1.78	6.054	34.025	5.671	4.373	1.122	0.794	33.668	5.037	150.82	131.00	8145	7410	6.134	32.734	-1.329	0.867	4.639	0.918	47.5
1200S250-118	5/8	0.1242	50	2.15	7.322	40.736	6.789	4.351	1.307	0.779	40.724	6.540	195.82	172.00	14982	11034	11.065	38.619	-1.305	0.854	4.609	0.920	47.1
1200S300-54+	5/8	0.0566	50	1.07	3.626	21.704	3.617	4.513	1.074	1.004	18.842	2.273	68.04	58.70	1377	1377	1.138	30.051	-1.743	1.111	4.941	0.876	57.4
1200S300-68	5/8	0.0713	50	1.34	4.542	27.026	4.504	4.500	1.320	0.994	25.752	3.318	99.33	82.10	2770	2770	2.262	37.127	-1.726	1.103	4.921	0.877	57.2
1200S300-97	5/8	0.1017	50	1.88	6.400	37.624	6.271	4.473	1.786	0.975	36.984	5.830	174.56	136.00	8145	7410	6.484	50.853	-1.691	1.085	4.880	0.880	56.7
1200S300-118	5/8	0.1242	50	2.28	7.745	45.116	7.519	4.452	2.096	0.960	45.103	7.231	244*	180.00	14982	11034	11.703	60.251	-1.666	1.071	4.849	0.882	53.0
1200S350-54+	1	0.0566	50	1.17	3.963	24.866	4.144	4.620	1.866	1.266	22.233	2.788	83.47	73.30	1377	1377	1.244	54.279	-2.363	1.478	5.342	0.804	71.4
1200S350-68	1	0.0713	50	1.46	4.966	31.002	5.167	4.609	2.306	1.257	30.331	4.062	121.61	101.00	2770	2770	2.473	67.251	-2.346	1.469	5.322	0.806	71.2
1200S350-97	1	0.1017	50	2.06	7.005	43.277	7.213	4.585	3.159	1.239	43.267	6.590	197.30	166.00	8145	7410	7.098	92.673	-2.310	1.450	5.281	0.809	70.8
1200S350-118	1	0.1242	50	2.49	8.485	52.002	8.667	4.567	3.741	1.225	51.990	8.259	274*	217.00	14982	11034	12.821	110.302	-2.284	1.436	5.251	0.811	66.9
1400S162-54+	1/2	0.0566	50	1.01	3.434	23.311	3.330	4.806	0.218	0.464	20.091	2.256	67.53	50.20	1176	1176	1.078	8.980	-0.667	0.454	4.874	0.981	29.7
1400S162-68	1/2	0.0713	50	1.26	4.299	28.963	4.138	4.788	0.262	0.456	26.125	3.135	93.85	71.50	2364	2364	2.141	10.966	-0.654	0.447	4.854	0.982	29.4
1400S162-97	1/2	0.1017	50	1.78	6.054	40.130	5.733	4.749	0.341	0.438	38.613	4.914	147.14	122.00	6938	6938	6.134	14.651	-0.628	0.433	4.811	0.983	28.7
1400S162-118	1/2	0.1242	50	2.15	7.322	47.944	6.849	4.720	0.387	0.424	47.537	6.282	188.07	162.00	12743	11285	11.065	17.032	-0.609	0.422	4.778	0.984	28.2
1400S200-54+	5/8	0.0566	50	1.07	3.626	25.960	3.709	4.936	0.406	0.617	22.812	2.440	73.05	59.90	1176	1176	1.138	16.355	-0.946	0.633	5.063	0.965	38.2
1400S200-68	5/8	0.0713	50	1.34	4.542	32.295	4.614	4.919	0.494	0.608	29.512	3.504	104.92	84.40	2364	2364	2.262	20.083	-0.932	0.625	5.043	0.966	37.9
1400S200-97	5/8	0.1017	50	1.88	6.400	44.867	6.410	4.884	0.655	0.590	43.369	5.580	167.06	142.00	6938	6938	6.484	27.156	-0.904	0.609	5.002	0.967	37.3
1400S200-118	5/8	0.1242	50	2.28	7.745	53.715	7.674	4.858	0.756	0.576	53.310	7.096	212.47	188.00	12743	11285	11.703	31.861	-0.883	0.598	4.971	0.968	36.8
1400S250-54+	5/8	0.0566	50	1.12	3.819	28.711	4.102	5.058	0.707	0.794	24.330	2.527	75.65	64.70	1176	1176	1.199	27.675	-1.272	0.835	5.275	0.942	47.6
1400S250-68	5/8	0.0713	50	1.41	4.784	35.753	5.108	5.043	0.865	0.784	32.488	3.550	106.29	91.00	2364	2364	2.383	34.118	-1.256	0.827	5.256	0.943	47.3
1400S250-97	5/8	0.1017	50	1.98	6.746	49.778	7.111	5.011	1.161	0.765	48.297	6.010	179.94	153.00	6938	6938	6.835	46.520	-1.225	0.811	5.215	0.945	46.7
1400S250-118	5/8	0.1242	50	2.40	8.168	59.693	8.528	4.987	1.353	0.751	59.291	7.880	235.92	203.00	12743	11285	12.342	54.927	-1.202	0.798	5.184	0.946	46.2
1400S300-54+	5/8	0.0566	50	1.18	4.012	31.462	4.495	5.166	1.115	0.972	25.548	2.580	77.25	67.60	1176	1176	1.259	42.691	-1.617	1.046	5.500	0.914	56.8
1400S300-68	5/8	0.0713	50	1.48	5.027	39.211	5.602	5.152	1.370	0.963	34.328	3.655	109.43	95.20	2364	2364	2.503	52.772	-1.601	1.038	5.480	0.915	56.5
1400S300-97	5/8	0.1017	50	2.08	7.092	54.689	7.813	5.123	1.854	0.943	52.219	6.372	190.78	160.00	6938	6938	7.186	72.365	-1.568	1.020	5.440	0.917	55.9
1400S300-118	5/8	0.1242	50	2.52	8.590	65.671	9.382	5.100	2.175	0.928	65.272	8.426	252.29	213.00	12743	11285	12.981	85.812	-1.544	1.008	5.409	0.919	55.5
1400S350-54+	1	0.0566	50	1.28	4.349	35.839	5.120	5.296	1.947	1.234	30.915	3.249	97.28	85.30	1176	1176	1.365	76.252	-2.207	1.400	5.868	0.859	70.7
1400S350-68	1	0.0713	50	1.60	5.452	44.718	6.388	5.283	2.406	1.225	42.938	4.710	141.01	119.00	2364	2364	2.715	94.534	-2.190	1.391	5.849	0.860	70.4
1400S350-97	1	0.1017	50	2.26	7.698	62.521	8.932	5.257	3.296	1.207	62.505	8.190	245.22	195.00	6938	6938	7.799	130.430	-2.155	1.373	5.809	0.862	69.9
1400S350-118	1	0.1242	50	2.74	9.330	75.217	10.745	5.238	3.903	1.193	75.197	10.259	340*	257.00	12743	11285	14.098	155.387	-2.130	1.360	5.779	0.864	66.1
1600S162-68+	1/2	0.0713	50	1.41	4.784	40.929	5.116	5.395	0.268	0.436	35.573	3.624	108.49	78.50	2062	2062	2.383	14.816	-0.601	0.415	5.446	0.988	28.6
1600S162-97	1/2	0.1017	50	1.98	6.746	56.845	7.106	5.355	0.348	0.419	53.192	5.738	171.79	136.00	6042	6042	6.835	19.807	-0.577	0.401	5.402	0.989	27.9
1600S162-118	1/2	0.1242	50	2.40	8.168	68.040	8.505	5.324	0.394	0.405	66.027	7.398	221.51	183.00	11086	11086	12.342	23.035	-0.559	0.391	5.369	0.989	27.4
1600S200-68+	5/8	0.0713	50	1.48	5.027	45.307	5.663	5.538	0.506	0.585	40.059	4.045	121.10	93.40	2062	2062	2.503	27.155	-0.862	0.584	5.635	0.977	37.1
1600S200-97	5/8	0.1017	50	2.08	7.092	63.072	7.884	5.501	0.671	0.567	59.472	6.500	194.60	159.00	6042	6042	7.186	36.744	-0.835	0.569	5.593	0.978	36.4
1600S200-118	5/8	0.1242	50	2.52	8.590	75.627	9.453	5.473	0.774	0.554	73.635	8.331	249.43	213.00	11086	11086	12.981	43.132	-0.815	0.558	5.561	0.979	35.9
1600S250-68+	5/8	0.0713	50	1.55	5.270	49.830	6.229	5.673	0.889	0.758	43.935	4.092	122.52	102.00	2062	2062	2.624	46.230	-1.167	0.778	5.841	0.960	46.5
1600S250-97	5/8	0.1017	50	2.19	7.438	69.498	8.687	5.639	1.193	0.739	65.945	6.982	209.05	173.00	6042	6042	7.536	63.082	-1.138	0.762	5.799	0.962	45.9
1600S250-118	5/8	0.1242	50	2.65	9.013	83.452	10.432	5.613	1.390	0.724	81.480	9.221	276.08	232.00	11086	11086	13.619	74.524	-1.116	0.750	5.769	0.963	45.4
1600S300-68+	5/8	0.0713	50	1.62	5.512	54.353	6.794	5.792	1.411	0.933	46.265	4.210	126.04	107.00	2062	2062	2.745	71.609	-1.494	0.981	6.055	0.939	55.8
1600S300-97	5/8	0.1017	50	2.29	7.784	75.924	9.491	5.761	1.910	0.914	71.014	7.391	221.28	182.00	6042	6042	7.887	98.275	-1.463	0.964	6.014	0.941	55.1
1600S300-118	5/8	0.1242	50	2.77	9.436	91.278	11.410	5.737	2.240	0.899	89.323	9.835	294.47	245.00	11086	11086	14.258	116.606	-1.439	0.951	5.983	0.942	54.7
1600S350-68+	1	0.0713	50	1.75	5.937	61.638	7.705	5.944	2.490	1.195	55.181	5.180	155.09	135.00	2062	2062	2.957	127.370	-2.055	1.322	6.402	0.897	69.7
1600S350-97	1	0.1017	50	2.47	8.390	86.292	10.786	5.916	3.410	1.176	82.842	8.382	250.95	224.00	6042	6042	8.500	175.896	-2.022	1.304	6.362	0.899	69.1
1600S350-118	1	0.1242	50	2.99	10.175	103.917	12.990	5.895	4.039	1.162	101.987	11.304	338.45	296.00	11086	11086	15.375	209.692	-1.998	1.291	6.332	0.900	68.8

NOTE: See page 7 for Table Notes.

STRUCTURAL STUD PROPERTIES

Web Depth(h)-to-Thickness (t) Ratios

MIL THICKNESS	18 mil		27 mil		30 mil		33 mil		43 mil		54 mil		68 mil		97 mil		118 mil	
DESIGN THICKNESS (in.)	0.0188		0.0283		0.0312		0.0346		0.0451		0.0566		0.0712		0.1017		0.1242	
INSIDE BEND RADIUS (in.)	0.0844		0.0796		0.0782		0.0765		0.0712		0.0849		0.1069		0.1525		0.1863	
DEPTH (in.)	h (in.)	h/t	h (in.)	h/t	h (in.)	h/t	h (in.)	h/t	h (in.)	h/t	h (in.)	h/t	h (in.)	h/t	h (in.)	h/t	h (in.)	h/t
1.625	1.42	75.5	1.41	49.8	1.41	45.1	1.40	40.5	1.39	30.9	1.34	23.7	1.27	17.8	1.12	11.0	1.00	8.10
2.5	2.29	122	2.28	80.7	2.28	73.1	2.28	65.8	2.27	50.3	2.22	39.2	2.14	30.1	1.99	19.6	1.88	15.1
3.625	3.42	182	3.41	121	3.41	109	3.40	98.3	3.39	75.2	3.34	59.0	3.27	45.8	3.12	30.6	3.00	24.2
4	3.79	202[1]	3.78	134	3.78	121	3.78	109	3.77	83.5	3.72	65.7	3.64	51.1	3.49	34.3	3.38	27.2
6	5.79	*	5.78	204[1]	5.78	185	5.78	167	5.77	128	5.72	101	5.64	79.2	5.49	54.0	5.38	43.3
8	7.79	*	7.78	*	7.78	249[1]	7.78	225[1]	7.77	172	7.72	136	7.64	107	7.49	73.7	7.38	59.4
10	9.79	*	9.78	*	9.78	*	9.78	*	9.77	217[1]	9.72	172	9.64	135	9.49	93.3	9.38	75.5
12	11.8	*	11.8	*	11.8	*	11.8	*	11.8	*	11.7	207[1]	11.6	163	11.5	113	11.4	91.6
14	13.8	*	13.8	*	13.8	*	13.8	*	13.8	*	13.7	242[1]	13.6	191	13.5	133	13.4	108
16	15.8	*	15.8	*	15.8	*	15.8	*	15.8	*	15.7	*	15.6	219[1]	15.5	152	15.4	124

NOTE:
1. h/t exceeds 200.
2. * h/t exceeds 260.

Allowable Screw Connection Capacities (lbs)

					#6 SCREW			#8 SCREW			#10 SCREW			#12 SCREW			#14 SCREW		
					(P_{ss} = 643 lbs, P_{ts} = 419 lbs) 0.138' dia, 0.272" Head			(P_{ss} = 1278 lbs, P_{ts} = 586 lbs) 0.164" dia, 0.272" Head			(P_{ss} = 1644 lbs, P_{ts} = 419 lbs) 0.190" dia, 0.340" Head			(P_{ss} = 2330 lbs, P_{ts} = 419 lbs) 0.216" dia, 0.340" Head			(P_{ss} = 3048 lbs, P_{ts} = 419 lbs) 0.250" dia, 0.409" Head		
GAUGE DESIGNATION	MIL DESIGNATION	DESIGN THICKNESS (in.)	F_y (ksi)	F_u (ksi)	SHEAR	PULL-OUT	PULL-OVER	SHEAR	PULL-OUT	PULL-OVER	SHEAR	PULL-OUT	PULL-OVER	SHEAR	PULL-OUT	PULL-OVER	SHEAR	PULL-OUT	PULL-OVER
25	18	0.0188	33	33*	44	24	84	48	29	84	52	33	105	55	38	105	60	44	127
22	27	0.0283	33	33*	82	37	127	89	43	127	96	50	159	102	57	159	110	66	191
20	30	0.0312	33	33*	95	40	140	103	48	140	111	55	175	118	63	175	127	73	211
20	33	0.0346	33	45	151	61	140	164	72	195	177	84	265	188	95	265	203	110	318
18	43	0.0451	33	45	214	79	140	244	94	195	263	109	345	280	124	345	302	144	415
16	54	0.0566	33	45	214	100	140	344	118	195	370	137	386	394	156	433	424	180	521
14	68	0.0713	33	45	214	125	140	426	149	195	523	173	386	557	196	545	600	227	656
12	97	0.1017	33	45	214	140	140	426	195	195	548	246	386	777	280	775	1016	324	936
16	54	0.0566	50	65	214	140	140	426	171	195	534	198	386	569	225	625	613	261	752
14	68	0.0713	50	65	214	140	140	426	195	195	548	249	386	777	284	775	866	328	948
12	97	0.1017	50	65	214	140	140	426	195	195	548	356	386	777	405	775	1016	468	1067
10	118	0.1242	50	65	214	140	140	426	195	195	548	386	386	777	494	775	1016	572	1067

NOTE:
* This is a NS type steel with no requirement for ultimate.
1. Capacities are based on section J4 of the AISI S100 Specification.
2. Capacities are based on Allowable Strength Design (ASD).
3. Screw pull-out capacities are based on listed head diameter.
4. Two sheets of equal thickness and tensile strength are assumed in tabulated values.
5. When materials of different steel thickness and tensile strength are connected, use the lowest value for shear capacity (tilting and bearing), for pull-out capacity use sheet closest to screw tip and for pull-over capacity use sheet closest to screw head.
6. Where multiple fasteners are used, screws are assumed to have a center-to-center spacing of at least 3 times the nominal diameter.
7. Screws are assumed to have a center-of-screw to edge-of-steel dimension of at least 1.5 times the nominal diameter of the screw.
8. When screws are subjected to combination of shear and tension forces, interaction equation of AISI S100 Specification section J4.5 shall be used
9. Screw Shear (Pss), tension (Pts), diameter, and head diameter are from CFSEI Tech Note (F701-12).
10. Screw shear strength is the average value, and tension strength is the lowest value listed in CFSEI Tech Note (F701-12).
11. Higher values for screw strength (Pss, Pts), may be obtained by specifying screws from a specific manufacturer.

Weld Capacities (lbs/in.)

GAUGE DESIGNATION	MIL DESIGNATION	DESIGN THICKNESS (in.)	F_y (ksi)	F_u (ksi)	FILLET WELDS		FLARE GROOVE WELDS	
					LONGITUDINAL	TRANSVERSE	LONGITUDINAL	TRANSVERSE
18	43	0.0451	33	45	499	864	544	663
16	54	0.0566	33	45	626	1084	682	832
14	68	0.0713	33	45	789	1365	859	1048
12	97	0.1017	33	45	1125	1480	1226	1480
16	54	0.0566	50	65	905	1566	985	1202
14	68	0.0713	50	65	1140	1972	1241	1514
12	97	0.1017	50	65	1480	1480	1480	1480

NOTE:
1. Capacities based on the AISI S100 Specification Sections J2.5 for fillet welds and J2.6 for flare groove welds.
2. When connecting materials of different steel thicknesses or tensile strengths, use the lowest values.
3. Capacities are based on Allowable Strength Design (ASD).
4. Weld capacities are based on E60 electrodes. For material thinner than 68 mil, 0.030" to 0.035" diameter wire electrodes may provide best results.
5. Longitudinal capacity is considered to be loading in the direction of the length of the weld.
6. Transverse capacity is loading in perpendicular direction of the length of the weld.
7. For flare groove welds, the effective throat of weld is conservatively assumed to be less than 2t.
8. For longitudinal fillet welds, a minimum value of Eq. J2.5-1, J2.5-2, J2.5-3, J2.5-4 were used.
9. For transverse fillet welds, a minimum value of Eq. J2.5-5 and J2.5-6 were used.
10. For longitudinal flare groove welds, a minimum value of Eq. J2.6-2 and J2.6-3 were used
11. For transverse flare groove welds, a minimum value of Eq. J2.6-1 was used.

For more information, please contact Marino\WARE® Technical Services at 866.545.1545
This technical information reflects the most current information available and supersedes any and all
previous publications effective February 17, 2023 | MW-Cold Formed Catalog | © WARE Industries, Inc., 2023

STRUCTURAL TRACK SECTION PROPERTIES

			GROSS PROPERTIES							EFFECTIVE PROPERTIES				TORSIONAL PROPERTIES					
MEMBER	DESIGN THICKNESS (in.)	F_y (ksi)	AREA (in.^{2})	WEIGHT (lb/ft)	I_x (in.^{4})	S_x (in.^{3})	r_x (in.)	I_y (in.^{4})	r_y (in.)	I_{xd} (in.^{4})	S_{xe} (in.^{3})	M_a (in.-k)	V_{ag} (lb)	Jx1000 (in.^{4})	C_w (in.^{6})	X_o (in.)	m (in.)	r_o (in.)	ß
250T125-33	0.0346	33	0.173	0.588	0.192	0.145	1.05	0.0272	0.397	0.167	0.103	2.03	1024	0.0690	0.0328	-0.760	0.456	1.36	0.687
250T125-43	0.0451	33	0.225	0.766	0.250	0.188	1.06	0.0351	0.395	0.233	0.147	2.91	1356	0.153	0.0425	-0.755	0.453	1.36	0.690
250T125-43	0.0451	50	0.225	0.766	0.250	0.188	1.06	0.0351	0.395	0.221	0.137	4.09	2054	0.153	0.0425	-0.755	0.453	1.36	0.690
250T125-54	0.0566	50	0.282	0.961	0.318	0.236	1.06	0.0435	0.392	0.299	0.188	5.64	2563	0.302	0.0539	-0.749	0.449	1.36	0.696
250T125-68	0.0713	50	0.355	1.21	0.408	0.297	1.07	0.0539	0.389	0.405	0.262	7.85	3199	0.602	0.0689	-0.740	0.444	1.36	0.704
250T125-97	0.1017	50	0.506	1.72	0.604	0.423	1.09	0.0744	0.383	0.604	0.423	12.7	4476	1.75	0.102	-0.724	0.434	1.37	0.719
250T200-33	0.0346	33	0.225	0.765	0.280	0.212	1.12	0.0974	0.658	0.204	0.112	2.22	1024	0.0897	0.118	-1.42	0.813	1.92	0.455
250T200-43	0.0451	33	0.293	0.996	0.366	0.275	1.12	0.126	0.657	0.290	0.163	3.21	1356	0.199	0.153	-1.41	0.810	1.92	0.457
250T200-43	0.0451	50	0.293	0.996	0.366	0.275	1.12	0.126	0.657	0.272	0.150	4.48	2054	0.199	0.153	-1.41	0.810	1.92	0.457
250T200-54	0.0566	50	0.367	1.25	0.466	0.346	1.13	0.157	0.654	0.374	0.209	6.25	2563	0.392	0.195	-1.41	0.806	1.92	0.462
250T200-68	0.0713	50	0.462	1.57	0.600	0.437	1.14	0.196	0.652	0.519	0.296	8.87	3199	0.784	0.251	-1.40	0.800	1.92	0.469
250T200-97	0.1017	50	0.659	2.24	0.894	0.626	1.17	0.275	0.646	0.861	0.510	15.3	4476	2.27	0.374	-1.38	0.789	1.92	0.484
250T250-33	0.0346	33	0.259	0.883	0.339	0.256	1.14	0.178	0.827	0.224	0.116	2.30	1024	0.104	0.218	-1.88	1.06	2.35	0.361
250T250-43	0.0451	33	0.338	1.15	0.443	0.333	1.15	0.230	0.826	0.319	0.169	3.34	1356	0.229	0.283	-1.87	1.05	2.35	0.362
250T250-43	0.0451	50	0.338	1.15	0.443	0.333	1.15	0.230	0.826	0.298	0.155	4.64	2054	0.229	0.283	-1.87	1.05	2.35	0.362
250T250-54	0.0566	50	0.424	1.44	0.565	0.419	1.16	0.288	0.824	0.412	0.217	6.50	2563	0.453	0.361	-1.87	1.05	2.34	0.366
250T250-68	0.0713	50	0.534	1.82	0.728	0.530	1.17	0.360	0.821	0.578	0.310	9.27	3199	0.904	0.466	-1.86	1.04	2.34	0.372
250T250-97	0.1017	50	0.761	2.59	1.09	0.761	1.20	0.506	0.816	0.976	0.541	16.2	4476	2.62	0.696	-1.83	1.03	2.34	0.384
250T300-33	0.0346	33	0.294	1.00	0.398	0.301	1.16	0.290	0.993	0.240	0.119	2.36	1024	0.117	0.360	-2.35	1.30	2.80	0.298
250T300-43	0.0451	33	0.383	1.30	0.521	0.391	1.17	0.376	0.991	0.344	0.174	3.43	1356	0.260	0.470	-2.34	1.30	2.80	0.299
250T300-43	0.0451	50	0.383	1.30	0.521	0.391	1.17	0.376	0.991	0.320	0.159	4.77	2054	0.260	0.470	-2.34	1.30	2.80	0.299
250T300-54	0.0566	50	0.480	1.64	0.664	0.492	1.18	0.470	0.989	0.445	0.223	6.69	2563	0.513	0.599	-2.34	1.29	2.79	0.302
250T300-68	0.0713	50	0.605	2.06	0.856	0.623	1.19	0.589	0.987	0.627	0.319	9.56	3199	1.03	0.773	-2.32	1.29	2.79	0.307
250T300-97	0.1017	50	0.862	2.93	1.28	0.896	1.22	0.831	0.981	1.07	0.563	16.9	4476	2.97	1.16	-2.30	1.28	2.78	0.316
362T125-33	0.0346	33	0.212	0.721	0.438	0.232	1.44	0.0301	0.377	0.384	0.174	3.44	1024	0.0845	0.0756	-0.658	0.409	1.63	0.836
362T125-43	0.0451	33	0.276	0.939	0.571	0.302	1.44	0.0388	0.375	0.530	0.245	4.84	1739	0.187	0.0978	-0.654	0.407	1.62	0.838
362T125-43	0.0451	50	0.276	0.939	0.571	0.302	1.44	0.0388	0.375	0.508	0.230	6.89	2141	0.187	0.0978	-0.654	0.407	1.62	0.838
362T125-54	0.0566	50	0.346	1.18	0.723	0.378	1.45	0.0481	0.373	0.677	0.312	9.34	3372	0.370	0.123	-0.648	0.404	1.63	0.841
362T125-68	0.0713	50	0.436	1.48	0.921	0.475	1.45	0.0597	0.370	0.907	0.427	12.8	4703	0.738	0.156	-0.641	0.399	1.63	0.846
362T125-97	0.1017	50	0.621	2.11	1.34	0.675	1.47	0.0822	0.364	1.34	0.675	20.2	6622	2.14	0.226	-0.626	0.390	1.64	0.854
362T125-118	0.1242	50	0.757	2.58	1.67	0.821	1.48	0.0978	0.359	1.67	0.821	28.2*	8008	3.89	0.278	-0.615	0.383	1.65	0.860
362T200-33	0.0346	33	0.264	0.897	0.619	0.328	1.53	0.110	0.645	0.463	0.190	3.76	1024	0.105	0.269	-1.27	0.754	2.09	0.631
362T200-43	0.0451	33	0.343	1.17	0.808	0.427	1.53	0.142	0.643	0.647	0.270	5.34	1739	0.233	0.350	-1.27	0.752	2.09	0.633
362T200-43	0.0451	50	0.343	1.17	0.808	0.427	1.53	0.142	0.643	0.613	0.252	7.56	2141	0.233	0.350	-1.27	0.752	2.09	0.633
362T200-54	0.0566	50	0.431	1.47	1.02	0.536	1.54	0.177	0.641	0.829	0.345	10.3	3372	0.460	0.442	-1.26	0.748	2.09	0.638
362T200-68	0.0713	50	0.543	1.85	1.31	0.675	1.55	0.221	0.638	1.13	0.480	14.4	4703	0.919	0.564	-1.25	0.743	2.09	0.643
362T200-97	0.1017	50	0.773	2.63	1.92	0.963	1.58	0.308	0.632	1.83	0.804	24.1	6622	2.67	0.825	-1.23	0.732	2.10	0.655
362T200-118	0.1242	50	0.944	3.21	2.39	1.18	1.59	0.371	0.627	2.39	1.07	32.1	8008	4.85	1.03	-1.22	0.724	2.10	0.663
362T250-33	0.0346	33	0.298	1.02	0.740	0.393	1.58	0.200	0.820	0.505	0.198	3.90	1024	0.119	0.493	-1.71	0.992	2.46	0.520
362T250-43	0.0451	33	0.389	1.32	0.966	0.510	1.58	0.260	0.818	0.709	0.282	5.56	1739	0.264	0.641	-1.70	0.990	2.46	0.521
362T250-43	0.0451	50	0.389	1.32	0.966	0.510	1.58	0.260	0.818	0.670	0.262	7.85	2141	0.264	0.641	-1.70	0.990	2.46	0.521
362T250-54	0.0566	50	0.487	1.66	1.22	0.641	1.59	0.324	0.816	0.909	0.360	10.8	3372	0.521	0.812	-1.70	0.986	2.46	0.525
362T250-68	0.0713	50	0.614	2.09	1.57	0.808	1.60	0.406	0.813	1.25	0.503	15.1	4703	1.04	1.04	-1.69	0.980	2.46	0.530
362T250-97	0.1017	50	0.875	2.98	2.30	1.16	1.62	0.570	0.807	2.06	0.851	25.5	6622	3.02	1.52	-1.67	0.969	2.46	0.541
362T250-118	0.1242	50	1.07	3.63	2.87	1.41	1.64	0.688	0.803	2.72	1.15	34.4	8008	5.49	1.90	-1.65	0.961	2.46	0.549
362T300-33	0.0346	33	0.333	1.13	0.861	0.457	1.61	0.327	0.992	0.541	0.197	3.89	1024	0.133	0.811	-2.16	1.23	2.87	0.434
362T300-43	0.0451	33	0.434	1.48	1.12	0.594	1.61	0.425	0.990	0.763	0.290	5.73	1739	0.294	1.06	-2.15	1.23	2.86	0.435
362T300-43	0.0451	50	0.434	1.48	1.12	0.594	1.61	0.425	0.990	0.718	0.270	8.08	2141	0.294	1.06	-2.15	1.23	2.86	0.435
362T300-54	0.0566	50	0.544	1.85	1.43	0.746	1.62	0.531	0.988	0.979	0.371	11.1	3372	0.581	1.34	-2.15	1.23	2.86	0.439
362T300-68	0.0713	50	0.685	2.33	1.82	0.941	1.63	0.665	0.985	1.35	0.519	15.6	4703	1.16	1.71	-2.14	1.22	2.86	0.443
362T300-97	0.1017	50	0.977	3.32	2.68	1.35	1.66	0.937	0.979	2.25	0.887	26.5	6622	3.37	2.52	-2.12	1.21	2.86	0.453
362T300-118	0.1242	50	1.19	4.06	3.35	1.65	1.68	1.13	0.975	3.00	1.21	36.1	8008	6.13	3.15	-2.10	1.20	2.86	0.460
400T125-33	0.0346	33	0.225	0.765	0.549	0.265	1.56	0.0309	0.371	0.484	0.201	3.97	939	0.0897	0.0946	-0.630	0.396	1.73	0.867
400T125-43	0.0451	33	0.293	0.996	0.716	0.344	1.56	0.0398	0.369	0.666	0.282	5.57	1739	0.199	0.122	-0.626	0.394	1.72	0.868
400T125-43	0.0451	50	0.293	0.996	0.716	0.344	1.56	0.0398	0.369	0.639	0.266	7.96	2078	0.199	0.122	-0.626	0.394	1.72	0.868
400T125-54	0.0566	50	0.367	1.25	0.904	0.431	1.57	0.0493	0.367	0.849	0.359	10.7	3372	0.392	0.154	-0.621	0.390	1.73	0.871
400T125-68	0.0713	50	0.462	1.57	1.15	0.541	1.58	0.0611	0.364	1.13	0.488	14.6	5205	0.784	0.194	-0.614	0.386	1.73	0.874
400T125-97	0.1017	50	0.659	2.24	1.67	0.768	1.59	0.0842	0.358	1.67	0.768	23.0	7337	2.27	0.280	-0.600	0.377	1.74	0.881
400T125-118	0.1242	50	0.804	2.74	2.07	0.934	1.61	0.100	0.353	2.07	0.934	32.1*	8881	4.13	0.343	-0.589	0.370	1.75	0.886
400T200-33	0.0346	33	0.277	0.941	0.768	0.371	1.67	0.113	0.639	0.580	0.220	4.34	939	0.110	0.336	-1.23	0.737	2.17	0.678
400T200-43	0.0451	33	0.360	1.23	1.00	0.482	1.67	0.146	0.637	0.808	0.311	6.14	1739	0.244	0.437	-1.22	0.734	2.16	0.680
400T200-43	0.0451	50	0.360	1.23	1.00	0.482	1.67	0.146	0.637	0.768	0.291	8.72	2078	0.244	0.437	-1.22	0.734	2.16	0.680
400T200-54	0.0566	50	0.452	1.54	1.27	0.604	1.68	0.182	0.635	1.03	0.397	11.9	3372	0.483	0.551	-1.22	0.730	2.17	0.684
400T200-68	0.0713	50	0.569	1.94	1.62	0.761	1.69	0.227	0.632	1.41	0.549	16.4	5205	0.965	0.702	-1.21	0.725	2.17	0.689
400T200-97	0.1017	50	0.811	2.76	2.36	1.09	1.71	0.318	0.626	2.26	0.911	27.3	7337	2.80	1.02	-1.19	0.715	2.17	0.699
400T200-118	0.1242	50	0.990	3.37	2.94	1.33	1.72	0.382	0.621	2.94	1.21	36.3	8881	5.09	1.27	-1.18	0.707	2.18	0.707
400T250-33	0.0346	33	0.311	1.06	0.914	0.441	1.71	0.207	0.815	0.632	0.222	4.38	939	0.124	0.615	-1.66	0.973	2.52	0.567
400T250-43	0.0451	33	0.405	1.38	1.19	0.573	1.72	0.268	0.813	0.885	0.324	6.40	1739	0.275	0.799	-1.65	0.970	2.52	0.569
400T250-43	0.0451	50	0.405	1.38	1.19	0.573	1.72	0.268	0.813	0.838	0.303	9.06	2078	0.275	0.799	-1.65	0.970	2.52	0.569
400T250-54	0.0566	50	0.509	1.73	1.51	0.720	1.72	0.335	0.811	1.13	0.413	12.4	3372	0.543	1.01	-1.65	0.966	2.52	0.572
400T250-68	0.0713	50	0.641	2.18	1.93	0.907	1.74	0.418	0.808	1.55	0.574	17.2	5205	1.09	1.29	-1.64	0.961	2.52	0.578
400T250-97	0.1017	50	0.913	3.11	2.82	1.30	1.76	0.588	0.802	2.53	0.965	28.9	7337	3.15	1.89	-1.62	0.950	2.52	0.588
400T250-118	0.1242	50	1.11	3.79	3.51	1.59	1.78	0.709	0.798	3.34	1.30	38.9	8881	5.73	2.34	-1.61	0.942	2.52	0.595

NOTE: See page 7 for Table Notes.

STRUCTURAL TRACK SECTION PROPERTIES

			GROSS PROPERTIES							EFFECTIVE PROPERTIES				TORSIONAL PROPERTIES					
MEMBER	DESIGN THICKNESS (in.)	F_y (ksi)	AREA (in.^{2})	WEIGHT (lb/ft)	I_x (in.^{4})	S_x (in.^{3})	r_x (in.)	I_y (in.^{4})	r_y (in.)	I_{xd} (in.^{4})	S_{xe} (in.^{3})	M_a (in.-k)	V_{ag} (lb)	Jx1000 (in.^{4})	C_w (in.^{6})	X_o (in.)	m (in.)	r_o (in.)	ß
400T300-33	0.0346	33	0.346	1.18	1.06	0.512	1.75	0.338	0.989	0.677	0.218	4.32	939	0.138	1.01	-2.10	1.21	2.91	0.478
400T300-43	0.0451	33	0.451	1.53	1.38	0.665	1.75	0.439	0.987	0.951	0.334	6.60	1739	0.306	1.31	-2.10	1.21	2.91	0.479
400T300-43	0.0451	50	0.451	1.53	1.38	0.665	1.75	0.439	0.987	0.898	0.301	9.00	2078	0.306	1.31	-2.10	1.21	2.91	0.479
400T300-54	0.0566	50	0.565	1.92	1.75	0.835	1.76	0.548	0.985	1.22	0.426	12.8	3372	0.604	1.66	-2.09	1.21	2.91	0.482
400T300-68	0.0713	50	0.712	2.42	2.24	1.05	1.77	0.686	0.982	1.68	0.594	17.8	5205	1.21	2.12	-2.08	1.20	2.90	0.487
400T300-97	0.1017	50	1.02	3.45	3.28	1.51	1.80	0.967	0.976	2.76	1.01	30.1	7337	3.50	3.11	-2.06	1.19	2.90	0.497
400T300-118	0.1242	50	1.24	4.22	4.09	1.85	1.82	1.17	0.972	3.67	1.36	40.7	8881	6.37	3.88	-2.05	1.18	2.90	0.503
600T125-33	0.0346	33	0.294	1.00	1.43	0.465	2.20	0.0338	0.339	1.24	0.297	5.87	622	0.117	0.238	-0.516	0.337	2.29	0.949
600T125-43	0.0451	33	0.383	1.30	1.86	0.604	2.21	0.0435	0.337	1.77	0.461	9.11	1377	0.260	0.307	-0.513	0.335	2.29	0.950
600T125-43	0.0451	50	0.383	1.30	1.86	0.604	2.21	0.0435	0.337	1.66	0.402	12.1	1377	0.260	0.307	-0.513	0.335	2.29	0.950
600T125-54	0.0566	50	0.480	1.64	2.34	0.756	2.21	0.0539	0.335	2.24	0.592	17.7	2728	0.513	0.384	-0.508	0.332	2.29	0.951
600T125-68	0.0713	50	0.605	2.06	2.97	0.950	2.22	0.0668	0.332	2.95	0.858	25.7	5350	1.03	0.483	-0.503	0.329	2.30	0.952
600T125-97	0.1017	50	0.862	2.93	4.28	1.35	2.23	0.0919	0.327	4.28	1.35	40.3	10885	2.97	0.685	-0.491	0.321	2.31	0.955
600T125-118	0.1242	50	1.05	3.58	5.27	1.64	2.24	0.109	0.322	5.27	1.64	56.3*	13539	5.41	0.832	-0.483	0.315	2.31	0.956
600T200-33	0.0346	33	0.346	1.18	1.91	0.622	2.35	0.126	0.604	1.51	0.333	6.59	622	0.138	0.847	-1.05	0.655	2.64	0.843
600T200-43	0.0451	33	0.451	1.53	2.49	0.809	2.35	0.163	0.602	2.08	0.565	11.2	1377	0.306	1.10	-1.04	0.652	2.64	0.844
600T200-43	0.0451	50	0.451	1.53	2.49	0.809	2.35	0.163	0.602	1.99	0.460	13.8	1377	0.306	1.10	-1.04	0.652	2.64	0.844
600T200-54	0.0566	50	0.565	1.92	3.15	1.02	2.36	0.204	0.600	2.64	0.717	21.5	2728	0.604	1.38	-1.04	0.649	2.65	0.846
600T200-68	0.0713	50	0.712	2.42	3.99	1.28	2.37	0.254	0.597	3.54	0.973	29.1	5350	1.21	1.75	-1.03	0.644	2.65	0.849
600T200-97	0.1017	50	1.02	3.45	5.77	1.82	2.39	0.355	0.591	5.56	1.57	46.9	10885	3.50	2.51	-1.02	0.635	2.66	0.854
600T200-118	0.1242	50	1.24	4.22	7.12	2.21	2.40	0.426	0.587	7.12	2.05	61.4	13539	6.37	3.08	-1.01	0.628	2.67	0.858
600T250-33	0.0346	33	0.380	1.30	2.24	0.728	2.42	0.233	0.783	1.62	0.332	6.56	622	0.152	1.54	-1.44	0.880	2.93	0.758
600T250-43	0.0451	33	0.496	1.69	2.92	0.946	2.43	0.303	0.781	2.26	0.563	11.1	1377	0.336	2.00	-1.44	0.878	2.92	0.759
600T250-43	0.0451	50	0.496	1.69	2.92	0.946	2.43	0.303	0.781	2.16	0.457	13.7	1377	0.336	2.00	-1.44	0.878	2.92	0.759
600T250-54	0.0566	50	0.622	2.12	3.68	1.19	2.43	0.377	0.779	2.87	0.732	21.9	2728	0.664	2.52	-1.43	0.874	2.93	0.761
600T250-68	0.0713	50	0.783	2.67	4.67	1.50	2.44	0.472	0.776	3.87	1.02	30.5	5350	1.33	3.20	-1.42	0.869	2.93	0.764
600T250-97	0.1017	50	1.12	3.80	6.77	2.13	2.46	0.662	0.770	6.15	1.66	49.6	10885	3.85	4.62	-1.41	0.859	2.94	0.771
600T250-118	0.1242	50	1.36	4.64	8.36	2.60	2.48	0.799	0.766	7.98	2.19	65.5	13539	7.01	5.69	-1.39	0.852	2.94	0.776
600T300-33	0.0346	33	0.415	1.41	2.56	0.833	2.48	0.384	0.962	1.68	0.331	6.54	622	0.166	2.52	-1.85	1.11	3.24	0.674
600T300-43	0.0451	33	0.541	1.84	3.34	1.08	2.48	0.498	0.960	2.42	0.556	11.0	1377	0.367	3.28	-1.85	1.11	3.24	0.675
600T300-43	0.0451	50	0.541	1.84	3.34	1.08	2.48	0.498	0.960	2.28	0.455	13.6	1377	0.367	3.28	-1.85	1.11	3.24	0.675
600T300-54	0.0566	50	0.679	2.31	4.21	1.36	2.49	0.622	0.957	3.08	0.722	21.6	2728	0.725	4.13	-1.84	1.11	3.24	0.677
600T300-68	0.0713	50	0.854	2.91	5.35	1.71	2.50	0.779	0.954	4.16	1.05	31.5	5350	1.45	5.24	-1.83	1.10	3.25	0.681
600T300-97	0.1017	50	1.22	4.15	7.76	2.44	2.52	1.10	0.949	6.66	1.72	51.6	10885	4.20	7.58	-1.82	1.09	3.25	0.688
600T300-118	0.1242	50	1.49	5.06	9.60	2.98	2.54	1.33	0.944	8.71	2.29	68.6	13539	7.65	9.36	-1.80	1.08	3.26	0.693
800T125-33+	0.0346	33	0.363	1.24	2.90	0.711	2.82	0.0356	0.313	2.43	0.407	8.04	465	0.145	0.456	-0.439	0.294	2.87	0.977
800T125-43	0.0451	33	0.473	1.61	3.77	0.924	2.82	0.0458	0.311	3.49	0.640	12.7	1030	0.321	0.589	-0.436	0.292	2.87	0.977
800T125-43	0.0451	50	0.473	1.61	3.77	0.924	2.82	0.0458	0.311	3.24	0.552	16.5	1030	0.321	0.589	-0.436	0.292	2.87	0.977
800T125-54	0.0566	50	0.594	2.02	4.75	1.16	2.83	0.0568	0.309	4.44	0.824	24.7	2039	0.634	0.735	-0.432	0.289	2.88	0.977
800T125-68	0.0713	50	0.748	2.54	6.00	1.45	2.83	0.0703	0.307	5.99	1.22	36.4	4086	1.27	0.920	-0.427	0.286	2.88	0.978
800T125-97	0.1017	50	1.07	3.63	8.61	2.06	2.84	0.0967	0.301	8.61	2.06	61.7	10885	3.67	1.30	-0.417	0.279	2.89	0.979
800T125-118	0.1242	50	1.30	4.43	10.6	2.51	2.85	0.115	0.297	10.6	2.51	86.2*	16235	6.69	1.57	-0.410	0.274	2.90	0.980
800T200-33+	0.0346	33	0.415	1.41	3.75	0.921	3.01	0.135	0.571	2.73	0.424	8.37	465	0.166	1.64	-0.917	0.589	3.19	0.918
800T200-43	0.0451	33	0.541	1.84	4.89	1.20	3.01	0.175	0.569	4.00	0.676	13.4	1030	0.367	2.12	-0.913	0.587	3.19	0.918
800T200-43	0.0451	50	0.541	1.84	4.89	1.20	3.01	0.175	0.569	3.66	0.577	17.3	1030	0.367	2.12	-0.913	0.587	3.19	0.918
800T200-54	0.0566	50	0.679	2.31	6.15	1.50	3.01	0.218	0.567	5.11	0.872	26.1	2039	0.725	2.66	-0.908	0.584	3.20	0.919
800T200-68	0.0713	50	0.854	2.91	7.79	1.89	3.02	0.272	0.564	7.06	1.31	39.2	4086	1.45	3.36	-0.902	0.580	3.20	0.921
800T200-97	0.1017	50	1.22	4.15	11.2	2.68	3.03	0.379	0.558	11.0	2.35	70.3	10885	4.20	4.79	-0.889	0.571	3.21	0.923
800T200-118	0.1242	50	1.49	5.06	13.8	3.27	3.05	0.456	0.554	13.8	3.06	91.6	16235	7.65	5.85	-0.879	0.565	3.22	0.925
800T250-33+	0.0346	33	0.450	1.53	4.32	1.06	3.10	0.252	0.748	2.92	0.442	8.74	465	0.179	2.99	-1.28	0.804	3.43	0.862
800T250-43	0.0451	33	0.586	1.99	5.63	1.38	3.10	0.326	0.746	4.49	0.739	14.6	1030	0.397	3.88	-1.27	0.801	3.43	0.862
800T250-43	0.0451	50	0.586	1.99	5.63	1.38	3.10	0.326	0.746	3.96	0.607	18.2	1030	0.397	3.88	-1.27	0.801	3.43	0.862
800T250-54	0.0566	50	0.735	2.50	7.09	1.73	3.11	0.407	0.744	5.70	0.959	28.7	2039	0.785	4.87	-1.27	0.798	3.44	0.864
800T250-68	0.0713	50	0.926	3.15	8.98	2.18	3.11	0.509	0.741	7.59	1.56	46.7	4086	1.57	6.15	-1.26	0.793	3.44	0.866
800T250-97	0.1017	50	1.32	4.49	12.9	3.10	3.13	0.714	0.735	11.9	2.49	74.5	10885	4.55	8.82	-1.25	0.784	3.45	0.869
800T250-118	0.1242	50	1.61	5.48	15.9	3.78	3.14	0.861	0.731	15.3	3.25	97.3	16235	8.28	10.8	-1.24	0.777	3.46	0.872
800T300-33+	0.0346	33	0.484	1.65	4.89	1.20	3.18	0.416	0.927	3.13	0.443	8.76	465	0.193	4.87	-1.66	1.03	3.70	0.799
800T300-43	0.0451	33	0.631	2.15	6.37	1.56	3.18	0.540	0.925	4.84	0.737	14.6	1030	0.428	6.33	-1.66	1.02	3.70	0.800
800T300-43	0.0451	50	0.631	2.15	6.37	1.56	3.18	0.540	0.925	4.25	0.608	18.2	1030	0.428	6.33	-1.66	1.02	3.70	0.800
800T300-54	0.0566	50	0.792	2.69	8.03	1.96	3.18	0.675	0.923	6.14	0.956	28.6	2039	0.845	7.96	-1.65	1.02	3.70	0.801
800T300-68	0.0713	50	0.997	3.39	10.2	2.47	3.19	0.844	0.920	8.20	1.55	46.4	4086	1.69	10.1	-1.64	1.02	3.71	0.803
800T300-97	0.1017	50	1.42	4.84	14.7	3.51	3.21	1.19	0.914	12.9	2.59	77.4	10885	4.90	14.5	-1.63	1.01	3.72	0.808
800T300-118	0.1242	50	1.74	5.91	18.1	4.29	3.23	1.44	0.910	16.7	3.40	102	16235	8.92	17.8	-1.62	0.998	3.72	0.811
1000T125-43+	0.0451	33	0.563	1.92	6.63	1.31	3.43	0.0474	0.290	5.87	0.819	16.2	822	0.382	0.973	-0.379	0.259	3.46	0.988
1000T125-43+	0.0451	50	0.563	1.92	6.63	1.31	3.43	0.0474	0.290	5.39	0.702	21.0	822	0.382	0.973	-0.379	0.259	3.46	0.988
1000T125-54	0.0566	50	0.707	2.41	8.33	1.63	3.43	0.0587	0.288	7.47	1.06	31.6	1627	0.755	1.21	-0.376	0.256	3.47	0.988
1000T125-68	0.0713	50	0.890	3.03	10.5	2.05	3.44	0.0727	0.286	10.2	1.58	47.2	3260	1.51	1.51	-0.372	0.253	3.47	0.989
1000T125-97	0.1017	50	1.27	4.32	15.1	2.91	3.45	0.100	0.281	15.1	2.75	82.4	9505	4.38	2.12	-0.363	0.247	3.48	0.989
1000T125-118	0.1242	50	1.55	5.27	18.5	3.54	3.45	0.119	0.277	18.5	3.54	106	16235	7.97	2.56	-0.357	0.243	3.48	0.990

NOTE: See page 7 for Table Notes.

For more information, please contact Marino\WARE® Technical Services at 866.545.1545
This technical information reflects the most current information available and supersedes any and all
previous publications effective February 17, 2023 | MW-Cold Formed Catalog | © WARE Industries, Inc., 2023

STRUCTURAL TRACK SECTION PROPERTIES

			GROSS PROPERTIES							EFFECTIVE PROPERTIES				TORSIONAL PROPERTIES					
MEMBER	DESIGN THICKNESS (in.)	F_y (ksi)	AREA (in.^{2})	WEIGHT (lb/ft)	I_x (in.^{4})	S_x (in.^{3})	r_x (in.)	I_y (in.^{4})	r_y (in.)	I_{xd} (in.^{4})	S_{xe} (in.^{3})	M_a (in.-k)	V_{ag} (lb)	Jx1000 (in.^{4})	C_w (in.^{6})	X_o (in.)	m (in.)	r_o (in.)	ß
1000T200-43+	0.0451	33	0.631	2.15	8.36	1.65	3.64	0.183	0.539	6.64	0.861	17.0	822	0.428	3.54	-0.813	0.534	3.77	0.953
1000T200-43+	0.0451	50	0.631	2.15	8.36	1.65	3.64	0.183	0.539	6.03	0.731	21.9	822	0.428	3.54	-0.813	0.534	3.77	0.953
1000T200-54	0.0566	50	0.792	2.69	10.5	2.06	3.65	0.228	0.537	8.48	1.11	33.3	1627	0.845	4.43	-0.809	0.531	3.77	0.954
1000T200-68	0.0713	50	0.997	3.39	13.3	2.59	3.65	0.284	0.534	11.8	1.68	50.4	3260	1.69	5.58	-0.803	0.527	3.78	0.955
1000T200-97	0.1017	50	1.42	4.84	19.1	3.69	3.66	0.397	0.528	18.7	3.08	92.3	9505	4.90	7.92	-0.791	0.519	3.79	0.956
1000T200-118	0.1242	50	1.74	5.91	23.4	4.49	3.67	0.477	0.524	23.4	4.21	126	16235	8.92	9.65	-0.783	0.514	3.79	0.957
1000T250-43+	0.0451	33	0.676	2.30	9.52	1.87	3.75	0.344	0.713	6.80	0.877	17.3	822	0.458	6.48	-1.15	0.737	3.99	0.917
1000T250-43+	0.0451	50	0.676	2.30	9.52	1.87	3.75	0.344	0.713	6.11	0.742	22.2	822	0.458	6.48	-1.15	0.737	3.99	0.917
1000T250-54	0.0566	50	0.848	2.89	12.0	2.35	3.76	0.429	0.711	8.70	1.13	33.9	1627	0.906	8.13	-1.14	0.734	3.99	0.918
1000T250-68	0.0713	50	1.07	3.64	15.1	2.95	3.76	0.536	0.708	12.3	1.73	51.7	3260	1.81	10.2	-1.14	0.730	3.99	0.919
1000T250-97	0.1017	50	1.52	5.18	21.8	4.20	3.78	0.751	0.702	20.1	3.20	95.9	9505	5.25	14.6	-1.12	0.721	4.00	0.921
1000T250-118	0.1242	50	1.86	6.33	26.7	5.12	3.79	0.906	0.698	25.7	4.42	132	16235	9.56	17.9	-1.11	0.715	4.01	0.923
1000T300-43+	0.0451	33	0.721	2.45	10.7	2.10	3.85	0.572	0.891	7.92	0.919	18.2	822	0.489	10.6	-1.51	0.950	4.23	0.873
1000T300-43+	0.0451	50	0.721	2.45	10.7	2.10	3.85	0.572	0.891	6.89	0.762	22.8	822	0.489	10.6	-1.51	0.950	4.23	0.873
1000T300-54	0.0566	50	0.905	3.08	13.4	2.63	3.85	0.714	0.888	10.2	1.19	35.7	1627	0.966	13.3	-1.50	0.947	4.23	0.874
1000T300-68	0.0713	50	1.14	3.88	17.0	3.31	3.86	0.894	0.885	14.1	1.91	57.0	3260	1.93	16.8	-1.49	0.943	4.23	0.876
1000T300-97	0.1017	50	1.63	5.53	24.4	4.72	3.88	1.26	0.880	21.9	3.59	107	9505	5.60	24.0	-1.48	0.934	4.24	0.879
1000T300-118	0.1242	50	1.98	6.75	30.0	5.76	3.89	1.52	0.875	28.1	4.67	140	16235	10.2	29.4	-1.47	0.927	4.25	0.881
1200T125-54+	0.0566	50	0.820	2.79	13.3	2.19	4.03	0.0601	0.271	11.4	1.29	38.5	1354	0.876	1.82	-0.333	0.230	4.06	0.993
1200T125-68	0.0713	50	1.03	3.51	16.8	2.75	4.04	0.0744	0.268	15.7	1.93	57.9	2712	1.75	2.27	-0.329	0.227	4.06	0.993
1200T125-97	0.1017	50	1.47	5.01	24.1	3.90	4.04	0.102	0.264	24.0	3.44	103	7901	5.08	3.17	-0.322	0.222	4.07	0.994
1200T125-118	0.1242	50	1.80	6.12	29.5	4.74	4.05	0.122	0.260	29.5	4.49	134	14431	9.24	3.81	-0.316	0.218	4.07	0.994
1200T200-54+	0.0566	50	0.905	3.08	16.5	2.70	4.27	0.236	0.510	12.8	1.35	40.4	1354	0.966	6.71	-0.730	0.487	4.36	0.972
1200T200-68	0.0713	50	1.14	3.88	20.8	3.40	4.27	0.294	0.508	18.0	2.06	61.6	2712	1.93	8.43	-0.725	0.483	4.36	0.972
1200T200-97	0.1017	50	1.63	5.53	29.8	4.82	4.28	0.410	0.502	29.2	3.82	114	7901	5.60	11.9	-0.714	0.476	4.37	0.973
1200T200-118	0.1242	50	1.98	6.75	36.5	5.88	4.29	0.493	0.498	36.5	5.28	158	14431	10.2	14.5	-0.706	0.471	4.38	0.974
1200T250-54+	0.0566	50	0.962	3.27	18.6	3.04	4.39	0.445	0.681	13.0	1.37	41.1	1354	1.03	12.3	-1.04	0.680	4.56	0.948
1200T250-68	0.0713	50	1.21	4.12	23.4	3.83	4.40	0.556	0.678	18.5	2.11	63.1	2712	2.05	15.5	-1.03	0.676	4.57	0.949
1200T250-97	0.1017	50	1.73	5.88	33.6	5.44	4.41	0.780	0.672	30.7	3.95	118	7901	5.95	22.1	-1.02	0.668	4.58	0.950
1200T250-118	0.1242	50	2.11	7.17	41.2	6.63	4.42	0.941	0.668	39.8	5.52	165	14431	10.8	26.9	-1.01	0.662	4.59	0.951
1200T300-54+	0.0566	50	1.02	3.46	20.6	3.38	4.50	0.745	0.855	14.1	1.39	41.7	1354	1.09	20.2	-1.38	0.884	4.78	0.917
1200T300-68	0.0713	50	1.28	4.36	26.1	4.26	4.51	0.932	0.852	20.1	2.14	64.1	2712	2.17	25.5	-1.37	0.880	4.79	0.918
1200T300-97	0.1017	50	1.83	6.22	37.4	6.06	4.53	1.31	0.847	33.5	4.05	121	7901	6.30	36.4	-1.36	0.871	4.80	0.920
1200T300-118	0.1242	50	2.23	7.60	45.9	7.39	4.54	1.58	0.842	43.2	5.70	171	14431	11.5	44.4	-1.35	0.865	4.81	0.922
1400T125-54+	0.0566	50	0.933	3.18	20.0	2.81	4.63	0.0611	0.256	16.0	1.52	45.4	1160	0.997	2.56	-0.299	0.209	4.64	0.996
1400T125-68	0.0713	50	1.18	4.00	25.2	3.54	4.63	0.0757	0.254	22.4	2.29	68.7	2322	1.99	3.19	-0.296	0.206	4.65	0.996
1400T125-97	0.1017	50	1.68	5.70	36.0	5.02	4.64	0.104	0.249	34.8	4.13	124	6759	5.78	4.44	-0.289	0.201	4.65	0.996
1400T125-118	0.1242	50	2.05	6.96	44.1	6.11	4.64	0.124	0.246	44.0	5.45	163	12342	10.5	5.33	-0.284	0.197	4.66	0.996
1400T200-54+	0.0566	50	1.02	3.46	24.2	3.41	4.88	0.242	0.487	17.8	1.59	47.6	1160	1.09	9.52	-0.665	0.449	4.95	0.982
1400T200-68	0.0713	50	1.28	4.36	30.6	4.29	4.88	0.301	0.485	25.2	2.43	72.8	2322	2.17	11.9	-0.661	0.446	4.95	0.982
1400T200-97	0.1017	50	1.83	6.22	43.8	6.10	4.89	0.420	0.479	41.6	4.56	136	6759	6.30	16.9	-0.651	0.439	4.96	0.983
1400T200-118	0.1242	50	2.23	7.60	53.6	7.43	4.90	0.505	0.476	53.5	6.35	190	12342	11.5	20.5	-0.644	0.434	4.97	0.983
1400T250-54+	0.0566	50	1.08	3.66	27.1	3.81	5.02	0.459	0.653	18.2	1.62	48.4	1160	1.15	17.6	-0.954	0.633	5.15	0.966
1400T250-68	0.0713	50	1.35	4.61	34.2	4.79	5.02	0.573	0.650	26.1	2.49	74.4	2322	2.29	22.1	-0.949	0.629	5.15	0.966
1400T250-97	0.1017	50	1.93	6.57	48.9	6.82	5.04	0.803	0.645	43.8	4.71	141	6759	6.65	31.3	-0.938	0.622	5.16	0.967
1400T250-118	0.1242	50	2.36	8.02	60.0	8.31	5.05	0.968	0.641	57.5	6.62	198	12342	12.1	38.1	-0.930	0.616	5.17	0.968
1400T300-54+	0.0566	50	1.13	3.85	29.9	4.21	5.14	0.769	0.825	19.0	1.64	49.0	1160	1.21	28.8	-1.27	0.829	5.36	0.944
1400T300-68	0.0713	50	1.43	4.85	37.7	5.30	5.15	0.963	0.822	27.3	2.52	75.6	2322	2.41	36.3	-1.27	0.825	5.36	0.944
1400T300-97	0.1017	50	2.03	6.91	54.1	7.54	5.16	1.35	0.816	46.3	4.82	144	6759	7.00	51.6	-1.25	0.817	5.37	0.946
1400T300-118	0.1242	50	2.48	8.44	66.3	9.19	5.17	1.64	0.812	61.1	6.82	204	12342	12.8	63.0	-1.24	0.811	5.38	0.947
1600T125-68+	0.0713	50	1.32	4.49	35.9	4.42	5.22	0.0767	0.241	30.6	2.65	79.4	2029	2.23	4.27	-0.268	0.189	5.23	0.997
1600T125-97	0.1017	50	1.88	6.40	51.3	6.28	5.23	0.106	0.237	48.1	4.83	144	5906	6.48	5.94	-0.262	0.184	5.24	0.997
1600T125-118	0.1242	50	2.29	7.81	62.8	7.64	5.23	0.125	0.234	61.3	6.42	192	10781	11.8	7.13	-0.257	0.181	5.24	0.998
1600T200-68+	0.0713	50	1.43	4.85	42.9	5.28	5.49	0.307	0.464	33.4	2.81	84.0	2029	2.41	16.1	-0.607	0.414	5.54	0.988
1600T200-97	0.1017	50	2.03	6.91	61.4	7.51	5.50	0.428	0.459	56.0	5.30	159	5906	7.00	22.8	-0.598	0.408	5.55	0.988
1600T200-118	0.1242	50	2.48	8.44	75.1	9.15	5.50	0.515	0.455	73.2	7.43	223	10781	12.8	27.6	-0.592	0.403	5.55	0.989
1600T250-68+	0.0713	50	1.50	5.09	47.6	5.86	5.64	0.586	0.626	35.1	2.86	85.8	2029	2.54	29.9	-0.878	0.588	5.74	0.977
1600T250-97	0.1017	50	2.13	7.26	68.1	8.33	5.65	0.821	0.620	59.6	5.46	164	5906	7.36	42.4	-0.868	0.581	5.75	0.977
1600T250-118	0.1242	50	2.61	8.86	83.4	10.2	5.66	0.990	0.616	78.6	7.73	231	10781	13.4	51.5	-0.860	0.576	5.76	0.978
1600T300-68+	0.0713	50	1.57	5.33	52.2	6.43	5.77	0.988	0.794	37.5	2.91	87.0	2029	2.66	49.2	-1.18	0.776	5.95	0.961
1600T300-97	0.1017	50	2.24	7.61	74.8	9.15	5.79	1.39	0.788	63.8	5.58	167	5906	7.71	70.0	-1.17	0.769	5.95	0.962
1600T300-118	0.1242	50	2.73	9.29	91.7	11.2	5.80	1.68	0.784	84.5	7.94	238	10781	14.0	85.2	-1.16	0.763	5.96	0.962

NOTE: See page 7 for Table Notes.

INTERIOR LIMITING HEIGHTS

MEMBER	F_y (ksi)	SPACING (in.) o.c.	5 psf			7.5 psf			10 psf		
			L/120	L/240	L/360	L/120	L/240	L/360	L/240	L/360	L/600
362S137-33	33	12	23' 2"	18' 6"	16' 1"	16' 1"	14' 1"	11' 10"	14' 7"	12' 9"	10' 9"
		16	21' 1"	16' 9"	14' 7"	14' 7"	12' 9"	10' 9"	13' 3"	11' 7"	9' 9"
		24	17' 2"	14' 7"	12' 9"	12' 9"	11' 2"	9' 4"	11' 7"	10' 2"	8' 7"
362S137-43	33	12	25' 3"	20' 1"	17' 6"	17' 6"	15' 3"	12' 10"	15' 10"	13' 10"	11' 8"
		16	23' 0"	18' 2"	15' 10"	15' 10"	13' 10"	11' 8"	14' 6"	12' 7"	10' 8"
		24	20' 1"	15' 10"	13' 10"	13' 10"	12' 2"	10' 3"	12' 7"	11' 0"	9' 3"
362S137-43	50	12	25' 3"	20' 1"	17' 6"	17' 6"	15' 3"	12' 10"	15' 10"	13' 10"	11' 8"
		16	23' 0"	18' 2"	15' 10"	15' 10"	13' 10"	11' 8"	14' 6"	12' 7"	10' 8"
		24	20' 1"	15' 10"	13' 10"	13' 10"	12' 2"	10' 3"	12' 7"	11' 0"	9' 3"
362S137-54	50	12	27' 1"	21' 6"	18' 9"	18' 9"	16' 4"	13' 9"	17' 0"	14' 10"	12' 7"
		16	24' 7"	19' 6"	17' 0"	17' 0"	14' 10"	12' 7"	15' 6"	13' 6"	11' 4"
		24	21' 6"	17' 0"	14' 10"	14' 10"	13' 0"	11' 0"	13' 6"	11' 9"	10' 0"
362S137-68	50	12	28' 10"	23' 0"	20' 1"	20' 1"	17' 6"	14' 9"	18' 2"	15' 10"	13' 4"
		16	26' 3"	20' 10"	18' 2"	18' 2"	15' 10"	13' 4"	16' 7"	14' 6"	12' 2"
		24	23' 0"	18' 2"	15' 10"	15' 10"	13' 10"	11' 8"	14' 6"	12' 7"	10' 8"
362S137-97	50	12	31' 9"	25' 3"	22' 1"	22' 1"	19' 3"	16' 3"	20' 0"	17' 6"	14' 9"
		16	28' 10"	22' 10"	20' 0"	20' 0"	17' 6"	14' 9"	18' 2"	15' 10"	13' 4"
		24	25' 3"	20' 0"	17' 6"	17' 6"	15' 3"	12' 10"	15' 10"	13' 10"	11' 8"
362S162-33	33	12	24' 4"	19' 3"	16' 10"	16' 10"	14' 9"	12' 4"	15' 3"	13' 4"	11' 3"
		16	22' 1"	17' 7"	15' 3"	15' 3"	13' 4"	11' 3"	13' 10"	12' 2"	10' 3"
		24	18' 7"	15' 3"	13' 4"	13' 4"	11' 8"	9' 10"	12' 2"	10' 7"	9' 0"
362S162-43	33	12	26' 6"	21' 0"	18' 4"	18' 4"	16' 1"	13' 6"	16' 8"	14' 7"	12' 3"
		16	24' 1"	19' 1"	16' 8"	16' 8"	14' 7"	12' 3"	15' 2"	13' 3"	11' 2"
		24	21' 0"	16' 8"	14' 7"	14' 7"	12' 8"	10' 8"	13' 3"	11' 7"	9' 9"
362S162-43	50	12	26' 6"	21' 0"	18' 4"	18' 4"	16' 1"	13' 6"	16' 8"	14' 7"	12' 3"
		16	24' 1"	19' 1"	16' 8"	16' 8"	14' 7"	12' 3"	15' 2"	13' 3"	11' 2"
		24	21' 0"	16' 8"	14' 7"	14' 7"	12' 8"	10' 8"	13' 3"	11' 7"	9' 9"
362S162-54	50	12	28' 4"	22' 6"	19' 8"	19' 8"	17' 2"	14' 6"	17' 10"	15' 7"	13' 2"
		16	25' 9"	20' 6"	17' 10"	17' 10"	15' 7"	13' 2"	16' 2"	14' 2"	12' 0"
		24	22' 6"	17' 10"	15' 7"	15' 7"	13' 7"	11' 6"	14' 2"	12' 4"	10' 6"
362S162-68	50	12	30' 4"	24' 1"	21' 1"	21' 1"	18' 4"	15' 6"	19' 1"	16' 8"	14' 1"
		16	27' 7"	21' 10"	19' 1"	19' 1"	16' 8"	14' 1"	17' 4"	15' 2"	12' 9"
		24	24' 1"	19' 1"	16' 8"	16' 8"	14' 7"	12' 3"	15' 2"	13' 3"	11' 2"
362S162-97	50	12	33' 6"	26' 7"	23' 2"	23' 2"	20' 3"	17' 1"	21' 1"	18' 4"	15' 7"
		16	30' 4"	24' 2"	21' 1"	21' 1"	18' 4"	15' 7"	19' 2"	16' 9"	14' 1"
		24	26' 7"	21' 1"	18' 4"	18' 4"	16' 1"	13' 7"	16' 9"	14' 7"	12' 3"
362S162-118	50	12	35' 3"	28' 0"	24' 6"	24' 6"	21' 4"	18' 0"	22' 2"	19' 4"	16' 4"
		16	32' 0"	25' 4"	22' 2"	22' 2"	19' 4"	16' 4"	20' 2"	17' 7"	14' 10"
		24	28' 0"	22' 2"	19' 4"	19' 4"	17' 0"	14' 3"	17' 7"	15' 4"	13' 0"
362S200-33	33	12	25' 8"	20' 4"	17' 9"	17' 9"	15' 7"	13' 1"	16' 2"	14' 1"	11' 10"
		16	23' 3"	18' 6"	16' 2"	16' 2"	14' 1"	11' 10"	14' 8"	12' 9"	10' 9"
		24	19' 8"	16' 2"	14' 1"	14' 1"	12' 4"	10' 4"	12' 9"	11' 2"	9' 6"
362S200-43	33	12	28' 0"	22' 2"	19' 4"	19' 4"	17' 0"	14' 3"	17' 7"	15' 4"	13' 0"
		16	25' 4"	20' 2"	17' 7"	17' 7"	15' 4"	13' 0"	16' 0"	14' 0"	11' 9"
		24	22' 2"	17' 7"	15' 4"	15' 4"	13' 6"	11' 3"	14' 0"	12' 2"	10' 3"
362S200-43	50	12	28' 0"	22' 2"	19' 4"	19' 4"	17' 0"	14' 3"	17' 7"	15' 4"	13' 0"
		16	25' 4"	20' 2"	17' 7"	17' 7"	15' 4"	13' 0"	16' 0"	14' 0"	11' 9"
		24	22' 2"	17' 7"	15' 4"	15' 4"	13' 6"	11' 3"	14' 0"	12' 2"	10' 3"
362S200-54	50	12	30' 0"	23' 9"	20' 9"	20' 9"	18' 2"	15' 3"	18' 10"	16' 6"	13' 10"
		16	27' 3"	21' 7"	18' 10"	18' 10"	16' 6"	13' 10"	17' 2"	15' 0"	12' 8"
		24	23' 9"	18' 10"	16' 6"	16' 6"	14' 4"	12' 2"	15' 0"	13' 1"	11' 1"
362S200-68	50	12	32' 1"	25' 6"	22' 3"	22' 3"	19' 6"	16' 4"	20' 2"	17' 8"	14' 10"
		16	29' 2"	23' 2"	20' 2"	20' 2"	17' 8"	14' 10"	18' 4"	16' 1"	13' 7"
		24	25' 6"	20' 2"	17' 8"	17' 8"	15' 4"	13' 0"	16' 1"	14' 0"	11' 9"
362S200-97	50	12	35' 6"	28' 2"	24' 7"	24' 7"	21' 6"	18' 2"	22' 4"	19' 7"	16' 6"
		16	32' 3"	25' 7"	22' 4"	22' 4"	19' 7"	16' 6"	20' 3"	17' 9"	15' 0"
		24	28' 2"	22' 4"	19' 7"	19' 7"	17' 1"	14' 4"	17' 9"	15' 6"	13' 1"
362S200-118	50	12	37' 6"	29' 8"	26' 0"	26' 0"	22' 8"	19' 1"	23' 7"	20' 7"	17' 4"
		16	34' 0"	27' 0"	23' 7"	23' 7"	20' 7"	17' 4"	21' 4"	18' 8"	15' 9"
		24	29' 8"	23' 7"	20' 7"	20' 7"	18' 0"	15' 2"	18' 8"	16' 4"	13' 9"
362S250-33	33	12	26' 8"	21' 2"	18' 6"	18' 6"	16' 2"	13' 8"	16' 9"	14' 8"	12' 4"
		16	24' 3"	19' 3"	16' 9"	16' 9"	14' 8"	12' 4"	15' 3"	13' 4"	11' 3"
		24	20' 4"	16' 9"	14' 8"	14' 8"	12' 10"	10' 9"	13' 4"	11' 8"	9' 10"
362S250-43	33	12	29' 6"	23' 4"	20' 6"	20' 6"	17' 10"	15' 1"	18' 7"	16' 2"	13' 8"
		16	26' 9"	21' 3"	18' 7"	18' 7"	16' 2"	13' 8"	16' 10"	14' 9"	12' 4"
		24	23' 4"	18' 7"	16' 2"	16' 2"	14' 2"	12' 0"	14' 9"	12' 10"	10' 10"
362S250-43	50	12	29' 2"	23' 1"	20' 2"	20' 2"	17' 8"	14' 10"	18' 4"	16' 0"	13' 6"
		16	26' 6"	21' 0"	18' 4"	18' 4"	16' 0"	13' 6"	16' 8"	14' 7"	12' 3"
		24	23' 1"	18' 4"	16' 0"	16' 0"	14' 0"	11' 9"	14' 7"	12' 8"	10' 8"
362S250-54	50	12	31' 7"	25' 0"	21' 10"	21' 10"	19' 1"	16' 1"	19' 10"	17' 4"	14' 7"
		16	28' 8"	22' 9"	19' 10"	19' 10"	17' 4"	14' 7"	18' 1"	15' 9"	13' 3"
		24	25' 0"	19' 10"	17' 4"	17' 4"	15' 2"	12' 9"	15' 9"	13' 9"	11' 7"
362S250-68	50	12	33' 10"	26' 10"	23' 6"	23' 6"	20' 7"	17' 3"	21' 4"	18' 8"	15' 9"
		16	30' 9"	24' 6"	21' 4"	21' 4"	18' 8"	15' 9"	19' 4"	17' 0"	14' 3"
		24	26' 10"	21' 4"	18' 8"	18' 8"	16' 3"	13' 9"	17' 0"	14' 9"	12' 6"
362S250-97	50	12	37' 7"	29' 9"	26' 1"	26' 1"	22' 9"	19' 2"	23' 8"	20' 8"	17' 6"
		16	34' 2"	27' 1"	23' 8"	23' 8"	20' 8"	17' 6"	21' 6"	18' 9"	15' 10"
		24	29' 9"	23' 8"	20' 8"	20' 8"	18' 1"	15' 2"	18' 9"	16' 4"	13' 10"
362S250-118	50	12	39' 8"	31' 6"	27' 6"	27' 6"	24' 1"	20' 3"	25' 0"	21' 10"	18' 4"
		16	36' 1"	28' 7"	25' 0"	25' 0"	21' 10"	18' 4"	22' 8"	19' 10"	16' 8"
		24	31' 6"	25' 0"	21' 10"	21' 10"	19' 1"	16' 1"	19' 10"	17' 3"	14' 7"

Notes:
1. 5 psf, 7.5 psf and 10 psf loads have not been reduced for strength or deflection checks. Full lateral load is applied.
2. Heights are based on continuous support of each flange over the full length of the stud.
3. Web crippling checks are based on end-one flange loading condition using 1-inch end bearing.
4. "e" web stiffeners required both ends.
5. Allowable Flexural Strength is based on lateral and torsional bracing at a max 48" o.c.
6. Limiting heights are based on steel properties only (non-composite)

For more information, please contact Marino\WARE® Technical Services at 866.545.1545
This technical information reflects the most current information available and supersedes any and all
previous publications effective February 17, 2023 | MW-Cold Formed Catalog | © WARE Industries, Inc., 2023

INTERIOR LIMITING HEIGHTS

MEMBER	F_y (ksi)	SPACING (in.) o.c.	5 psf			7.5 psf			10 psf		
			L/120	L/240	L/360	L/120	L/240	L/360	L/240	L/360	L/600
400S137-33	33	12	25' 1"	19' 10"	17' 4"	17' 4"	15' 2"	12' 9"	15' 9"	13' 9"	11' 7"
		16	22' 3"	18' 1"	15' 9"	15' 9"	13' 9"	11' 7"	14' 4"	12' 6"	10' 7"
		24	18' 2"	15' 9"	13' 9"	13' 9"	12' 1"	10' 2"	12' 6"	11' 0"	9' 2"
400S137-43	33	12	27' 3"	21' 8"	18' 10"	18' 10"	16' 6"	13' 10"	17' 2"	15' 0"	12' 8"
		16	24' 9"	19' 8"	17' 2"	17' 2"	15' 0"	12' 8"	15' 7"	13' 8"	11' 6"
		24	21' 7"	17' 2"	15' 0"	15' 0"	13' 1"	11' 1"	13' 8"	11' 10"	10' 1"
400-137-43	50	12	27' 3"	21' 8"	18' 10"	18' 10"	16' 6"	13' 10"	17' 2"	15' 0"	12' 8"
		16	24' 9"	19' 8"	17' 2"	17' 2"	15' 0"	12' 8"	15' 7"	13' 8"	11' 6"
		24	21' 8"	17' 2"	15' 0"	15' 0"	13' 1"	11' 1"	13' 8"	11' 10"	10' 1"
400S137-54	50	12	29' 2"	23' 2"	20' 3"	20' 3"	17' 8"	14' 10"	18' 4"	16' 1"	13' 7"
		16	26' 7"	21' 1"	18' 4"	18' 4"	16' 1"	13' 7"	16' 8"	14' 7"	12' 3"
		24	23' 2"	18' 4"	16' 1"	16' 1"	14' 1"	11' 10"	14' 7"	12' 9"	10' 9"
400S137-68	50	12	31' 3"	24' 9"	21' 8"	21' 8"	18' 10"	16' 0"	19' 8"	17' 2"	14' 6"
		16	28' 4"	22' 6"	19' 8"	19' 8"	17' 2"	14' 6"	17' 10"	15' 7"	13' 2"
		24	24' 9"	19' 8"	17' 2"	17' 2"	15' 0"	12' 8"	15' 7"	13' 8"	11' 6"
400S162-33	33	12	26' 3"	20' 10"	18' 2"	18' 2"	15' 10"	13' 4"	16' 7"	14' 6"	12' 2"
		16	23' 10"	19' 0"	16' 7"	16' 7"	14' 6"	12' 2"	15' 0"	13' 1"	11' 1"
		24	19' 8"	16' 7"	14' 6"	14' 6"	12' 7"	10' 8"	13' 1"	11' 6"	9' 8"
400S162-43	33	12	28' 7"	22' 8"	19' 9"	19' 9"	17' 3"	14' 7"	18' 0"	15' 8"	13' 3"
		16	26' 0"	20' 7"	18' 0"	18' 0"	15' 8"	13' 3"	16' 4"	14' 3"	12' 1"
		24	22' 8"	18' 0"	15' 8"	15' 8"	13' 8"	11' 7"	14' 3"	12' 6"	10' 6"
400S162-43	50	12	28' 7"	22' 8"	19' 9"	19' 9"	17' 3"	14' 7"	18' 0"	15' 8"	13' 3"
		16	26' 0"	20' 7"	18' 0"	18' 0"	15' 8"	13' 3"	16' 4"	14' 3"	12' 1"
		24	22' 8"	18' 0"	15' 8"	15' 8"	13' 8"	11' 7"	14' 3"	12' 6"	10' 6"
400S162-54	50	12	30' 7"	24' 3"	21' 2"	21' 2"	18' 7"	15' 8"	19' 3"	16' 10"	14' 2"
		16	27' 9"	22' 1"	19' 3"	19' 3"	16' 10"	14' 2"	17' 6"	15' 3"	12' 10"
		24	24' 3"	19' 3"	16' 10"	16' 10"	14' 8"	12' 4"	15' 3"	13' 4"	11' 3"
400S162-68	50	12	32' 9"	26' 0"	22' 8"	22' 8"	19' 10"	16' 9"	20' 8"	18' 1"	15' 2"
		16	29' 9"	23' 8"	20' 8"	20' 8"	18' 1"	15' 2"	18' 9"	16' 4"	13' 9"
		24	26' 0"	20' 8"	18' 1"	18' 1"	15' 9"	13' 3"	16' 4"	14' 3"	12' 1"
400S162-97	50	12	36' 2"	28' 9"	25' 1"	25' 1"	21' 10"	18' 6"	22' 9"	19' 10"	16' 9"
		16	32' 10"	26' 1"	22' 9"	22' 9"	19' 10"	16' 9"	20' 8"	18' 1"	15' 3"
		24	28' 9"	22' 9"	19' 10"	19' 10"	17' 4"	14' 8"	18' 1"	15' 9"	13' 3"
400S162-118	50	12	38' 2"	30' 3"	26' 6"	26' 6"	23' 1"	19' 6"	24' 0"	21' 0"	17' 8"
		16	34' 8"	27' 6"	24' 0"	24' 0"	21' 0"	17' 8"	21' 9"	19' 1"	16' 1"
		24	30' 3"	24' 0"	21' 0"	21' 0"	18' 3"	15' 6"	19' 1"	16' 8"	14' 1"
400S200-33	33	12	27' 8"	22' 0"	19' 2"	19' 2"	16' 9"	14' 1"	17' 4"	15' 2"	12' 10"
		16	25' 2"	20' 0"	17' 4"	17' 4"	15' 2"	12' 10"	15' 10"	13' 9"	11' 8"
		24	20' 9"	17' 4"	15' 2"	15' 2"	13' 3"	11' 2"	13' 9"	12' 1"	10' 2"
400S200-43	33	12	30' 2"	23' 10"	20' 10"	20' 10"	18' 3"	15' 4"	19' 0"	16' 7"	14' 0"
		16	27' 4"	21' 9"	19' 0"	19' 0"	16' 7"	14' 0"	17' 3"	15' 1"	12' 8"
		24	23' 10"	19' 0"	16' 7"	16' 7"	14' 6"	12' 2"	15' 1"	13' 2"	11' 1"
400S200-43	50	12	30' 2"	23' 10"	20' 10"	20' 10"	18' 3"	15' 4"	19' 0"	16' 7"	14' 0"
		16	27' 4"	21' 9"	19' 0"	19' 0"	16' 7"	14' 0"	17' 3"	15' 1"	12' 8"
		24	23' 10"	19' 0"	16' 7"	16' 7"	14' 6"	12' 2"	15' 1"	13' 2"	11' 1"
400S200-54	50	12	32' 4"	25' 8"	22' 4"	22' 4"	19' 7"	16' 6"	20' 4"	17' 9"	15' 0"
		16	29' 4"	23' 3"	20' 4"	20' 4"	17' 9"	15' 0"	18' 6"	16' 2"	13' 7"
		24	25' 8"	20' 4"	17' 9"	17' 9"	15' 7"	13' 1"	16' 2"	14' 1"	11' 10"
400S200-68	50	12	34' 8"	27' 6"	24' 0"	24' 0"	21' 0"	17' 8"	21' 9"	19' 1"	16' 1"
		16	31' 6"	25' 0"	21' 9"	21' 9"	19' 1"	16' 1"	19' 9"	17' 3"	14' 7"
		24	27' 6"	21' 9"	19' 1"	19' 1"	16' 8"	14' 1"	17' 3"	15' 1"	12' 9"
400S200-97	50	12	38' 4"	30' 6"	26' 7"	26' 7"	23' 2"	19' 7"	24' 2"	21' 1"	17' 9"
		16	34' 10"	27' 8"	24' 2"	24' 2"	21' 1"	17' 9"	22' 0"	19' 2"	16' 2"
		24	30' 6"	24' 2"	21' 1"	21' 1"	18' 4"	15' 7"	19' 2"	16' 9"	14' 1"
400S200-118	50	12	40' 6"	32' 1"	28' 1"	28' 1"	24' 6"	20' 8"	25' 6"	22' 3"	18' 9"
		16	36' 9"	29' 2"	25' 6"	25' 6"	22' 3"	18' 9"	23' 2"	20' 2"	17' 1"
		24	32' 1"	25' 6"	22' 3"	22' 3"	19' 6"	16' 4"	20' 2"	17' 8"	14' 10"
400S250-33	33	12	28' 9"	22' 10"	20' 0"	20' 0"	17' 4"	14' 8"	18' 1"	15' 10"	13' 4"
		16	26' 2"	20' 9"	18' 1"	18' 1"	15' 10"	13' 4"	16' 6"	14' 4"	12' 1"
		24	21' 6"	18' 1"	15' 10"	15' 10"	13' 9"	11' 8"	14' 4"	12' 7"	10' 7"
400S250-43	33	12	31' 9"	25' 2"	22' 0"	22' 0"	19' 2"	16' 2"	20' 0"	17' 6"	14' 9"
		16	28' 10"	22' 10"	20' 0"	20' 0"	17' 6"	14' 9"	18' 2"	15' 10"	13' 4"
		24	25' 2"	20' 0"	17' 6"	17' 6"	15' 3"	12' 10"	15' 10"	13' 10"	11' 8"
400S250-43	50	12	31' 4"	24' 10"	21' 9"	21' 9"	19' 0"	16' 0"	19' 9"	17' 3"	14' 7"
		16	28' 6"	22' 7"	19' 9"	19' 9"	17' 3"	14' 7"	18' 0"	15' 8"	13' 2"
		24	24' 10"	19' 9"	17' 3"	17' 3"	15' 1"	12' 8"	15' 8"	13' 8"	11' 7"
400S250-54	50	12	34' 0"	27' 0"	23' 7"	23' 7"	20' 7"	17' 4"	21' 4"	18' 8"	15' 9"
		16	30' 10"	24' 6"	21' 4"	21' 4"	18' 8"	15' 9"	19' 4"	17' 0"	14' 3"
		24	27' 0"	21' 4"	18' 8"	18' 8"	16' 3"	13' 9"	17' 0"	14' 9"	12' 6"
400S250-68	50	12	36' 7"	29' 0"	25' 4"	25' 4"	22' 1"	18' 8"	23' 0"	20' 1"	17' 0"
		16	33' 2"	26' 4"	23' 0"	23' 0"	20' 1"	17' 0"	20' 10"	18' 3"	15' 4"
		24	29' 0"	23' 0"	20' 1"	20' 1"	17' 7"	14' 9"	18' 3"	16' 0"	13' 6"
400S250-97	50	12	40' 6"	32' 2"	28' 1"	28' 1"	24' 7"	20' 8"	25' 6"	22' 3"	18' 9"
		16	36' 9"	29' 2"	25' 6"	25' 6"	22' 3"	18' 9"	23' 2"	20' 3"	17' 1"
		24	32' 2"	25' 6"	22' 3"	22' 3"	19' 6"	16' 4"	20' 3"	17' 8"	14' 10"
400S250-118	50	12	42' 9"	34' 0"	29' 8"	29' 8"	25' 10"	21' 10"	27' 0"	23' 7"	19' 10"
		16	38' 10"	30' 10"	27' 0"	27' 0"	23' 7"	19' 10"	24' 6"	21' 4"	18' 1"
		24	34' 0"	27' 0"	23' 7"	23' 7"	20' 7"	17' 4"	21' 4"	18' 8"	15' 9"

Notes:
1. 5 psf, 7.5 psf and 10 psf loads have not been reduced for strength or deflection checks. Full lateral load is applied.
2. Heights are based on continuous support of each flange over the full length of the stud.
3. Web crippling checks are based on end-one flange loading condition using 1-inch end bearing.
4. "e" web stiffeners required both ends.
5. Allowable Flexural Strength is based on lateral and torsional bracing at a max 48" o.c.
6. Limiting heights are based on steel properties only (non-composite)

INTERIOR LIMITING HEIGHTS

MEMBER	F_y (ksi)	SPACING (in.) o.c.	5 psf			7.5 psf			10 psf		
			L/120	L/240	L/360	L/120	L/240	L/360	L/240	L/360	L/600
600S137-33	33	12	32' 2"	27' 3"	23' 9"	23' 9"	20' 9"	17' 7"	21' 8"	18' 10"	16' 0"
		16	27' 10"	24' 9"	21' 8"	21' 8"	18' 10"	16' 0"	19' 8"	17' 2"	14' 6"
		24	22' 9"	21' 8"	18' 10"	18' 7"	16' 6"	13' 10"	16' 1"e	15' 0"	12' 8"
600S137-43	33	12	37' 8"	29' 10"	26' 1"	26' 1"	22' 9"	19' 3"	23' 8"	20' 8"	17' 6"
		16	33' 4"	27' 2"	23' 8"	23' 8"	20' 8"	17' 6"	21' 7"	18' 9"	15' 10"
		24	27' 3"	23' 8"	20' 8"	20' 8"	18' 1"	15' 3"	18' 9"	16' 6"	13' 10"
600S137-43	50	12	37' 6"	29' 9"	26' 0"	26' 0"	22' 8"	19' 2"	23' 7"	20' 7"	17' 4"
		16	34' 1"	27' 0"	23' 7"	23' 7"	20' 7"	17' 4"	21' 6"	18' 9"	15' 9"
		24	29' 9"	23' 7"	20' 7"	20' 7"	18' 0"	15' 2"	18' 9"	16' 4"	13' 9"
600S137-54	50	12	40' 4"	32' 1"	28' 0"	28' 0"	24' 6"	20' 7"	25' 6"	22' 2"	18' 9"
		16	36' 8"	29' 1"	25' 6"	25' 6"	22' 2"	18' 9"	23' 1"	20' 2"	17' 0"
		24	32' 1"	25' 6"	22' 2"	22' 2"	19' 4"	16' 4"	20' 2"	17' 8"	14' 10"
600S137-68	50	12	43' 3"	34' 4"	30' 0"	30' 0"	26' 2"	22' 1"	27' 3"	23' 9"	20' 1"
		16	39' 3"	31' 2"	27' 3"	27' 3"	23' 9"	20' 1"	24' 9"	21' 7"	18' 3"
		24	34' 4"	27' 3"	23' 9"	23' 9"	20' 9"	17' 7"	21' 7"	18' 10"	15' 10"
600S137-97	50	12	47' 10"	38' 0"	33' 2"	33' 2"	29' 0"	24' 6"	30' 2"	26' 4"	22' 2"
		16	43' 6"	34' 6"	30' 2"	30' 2"	26' 4"	22' 2"	27' 4"	23' 10"	20' 2"
		24	38' 0"	30' 2"	26' 4"	26' 4"	23' 0"	19' 4"	23' 10"	20' 10"	17' 7"
600S162-33	33	12	34' 9"	28' 7"	25' 0"	25' 0"	21' 10"	18' 4"	22' 8"	19' 10"	16' 9"
		16	30' 1"	26' 0"	22' 8"	22' 8"	19' 10"	16' 9"	20' 8"	18' 0"	15' 2"
		24	24' 7"	22' 8"	19' 10"	19' 10"	17' 4"	14' 7"	17' 4"e	15' 9"e	13' 3"
600S162-43	33	12	39' 3"	31' 2"	27' 3"	27' 3"	23' 9"	20' 1"	24' 9"	21' 7"	18' 2"
		16	35' 8"	28' 3"	24' 9"	24' 9"	21' 7"	18' 2"	22' 6"	19' 8"	16' 7"
		24	29' 4"	24' 9"	21' 7"	21' 7"	18' 10"	15' 10"	19' 8"	17' 2"	14' 6"
600S162-43	50	12	39' 3"	31' 2"	27' 3"	27' 3"	23' 9"	20' 1"	24' 9"	21' 7"	18' 2"
		16	35' 8"	28' 3"	24' 9"	24' 9"	21' 7"	18' 2"	22' 6"	19' 8"	16' 7"
		24	31' 2"	24' 9"	21' 7"	21' 7"	18' 10"	15' 10"	19' 8"	17' 2"	14' 6"
600S162-54	50	12	42' 2"	33' 6"	29' 2"	29' 2"	25' 6"	21' 6"	26' 7"	23' 2"	19' 7"
		16	38' 3"	30' 4"	26' 7"	26' 7"	23' 2"	19' 7"	24' 1"	21' 1"	17' 9"
		24	33' 6"	26' 7"	23' 2"	23' 2"	20' 3"	17' 1"	21' 1"	18' 4"	15' 6"
600S162-68	50	12	45' 2"	35' 10"	31' 3"	31' 3"	27' 4"	23' 1"	28' 6"	24' 10"	21' 0"
		16	41' 1"	32' 7"	28' 6"	28' 6"	24' 10"	21' 0"	25' 10"	22' 7"	19' 1"
		24	35' 10"	28' 6"	24' 10"	24' 10"	21' 8"	18' 3"	22' 7"	19' 8"	16' 8"
600S162-97	50	12	50' 1"	39' 9"	34' 8"	34' 8"	30' 3"	25' 7"	31' 7"	27' 7"	23' 3"
		16	45' 6"	36' 1"	31' 7"	31' 7"	27' 7"	23' 3"	28' 8"	25' 1"	21' 1"
		24	39' 9"	31' 7"	27' 7"	27' 7"	24' 1"	20' 3"	25' 1"	21' 10"	18' 6"
600S162-118	50	12	52' 10"	42' 0"	36' 8"	36' 8"	32' 1"	27' 0"	33' 3"	29' 1"	24' 7"
		16	48' 1"	38' 2"	33' 3"	33' 3"	29' 1"	24' 7"	30' 3"	26' 6"	22' 3"
		24	42' 0"	33' 3"	29' 1"	29' 1"	25' 4"	21' 6"	26' 6"	23' 1"	19' 6"
600S200-33	33	12	37' 3"	30' 1"	26' 3"	26' 3"	22' 10"	19' 3"	23' 10"	20' 9"	17' 7"
		16	32' 3"	27' 3"	23' 10"	23' 10"	20' 9"	17' 7"	21' 8"	18' 10"	16' 0"
		24	26' 4"	23' 10"	20' 9"	20' 9"e	18' 2"	15' 4"	18' 7"e	16' 6"e	13' 10"
600S200-43	33	12	41' 3"	32' 9"	28' 7"	28' 7"	25' 0"	21' 1"	26' 0"	22' 8"	19' 2"
		16	37' 6"	29' 9"	26' 0"	26' 0"	22' 8"	19' 2"	23' 7"	20' 7"	17' 4"
		24	31' 6"	26' 0"	22' 8"	22' 8"	19' 9"	16' 8"	20' 7"	18' 0"	15' 2"
600S200-43	50	12	41' 3"	32' 9"	28' 7"	28' 7"	25' 0"	21' 1"	26' 0"	22' 8"	19' 2"
		16	37' 6"	29' 9"	26' 0"	26' 0"	22' 8"	19' 2"	23' 7"	20' 7"	17' 4"
		24	32' 9"	26' 0"	22' 8"	22' 8"	19' 9"	16' 8"	20' 7"	18' 0"	15' 2"
600S200-54	50	12	44' 3"	35' 2"	30' 8"	30' 8"	26' 9"	22' 7"	27' 10"	24' 4"	20' 7"
		16	40' 3"	32' 0"	27' 10"	27' 10"	24' 4"	20' 7"	25' 4"	22' 2"	18' 8"
		24	35' 2"	27' 10"	24' 4"	24' 4"	21' 3"	18' 0"	22' 2"	19' 4"	16' 3"
600S200-68	50	12	47' 7"	37' 8"	33' 0"	33' 0"	28' 9"	24' 3"	30' 0"	26' 2"	22' 1"
		16	43' 2"	34' 3"	30' 0"	30' 0"	26' 2"	22' 1"	27' 2"	23' 9"	20' 1"
		24	37' 8"	30' 0"	26' 2"	26' 2"	22' 10"	19' 3"	23' 9"	20' 9"	17' 6"
600S200-97	50	12	52' 9"	41' 10"	36' 7"	36' 7"	32' 0"	27' 0"	33' 3"	29' 1"	24' 6"
		16	48' 0"	38' 1"	33' 3"	33' 3"	29' 1"	24' 6"	30' 2"	26' 4"	22' 3"
		24	41' 10"	33' 3"	29' 1"	29' 1"	25' 4"	21' 4"	26' 4"	23' 1"	19' 4"
600S200-118	50	12	55' 9"	44' 3"	38' 8"	38' 8"	33' 9"	28' 6"	35' 2"	30' 8"	25' 10"
		16	50' 8"	40' 3"	35' 2"	35' 2"	30' 8"	25' 10"	32' 0"	27' 10"	23' 7"
		24	44' 3"	35' 2"	30' 8"	30' 8"	26' 9"	22' 7"	27' 10"	24' 4"	20' 7"
600S250-43	33	12	43' 2"	34' 3"	30' 0"	30' 0"	26' 2"	22' 1"	27' 2"	23' 9"	20' 1"
		16	39' 3"	31' 2"	27' 2"	27' 2"	23' 9"	20' 1"	24' 8"	21' 7"	18' 2"
		24	32' 3"	27' 2"	23' 9"	23' 9"	20' 9"	17' 6"	21' 7"	18' 10"	15' 10"
600S250-43	50	12	42' 9"	33' 10"	29' 7"	29' 7"	25' 10"	21' 9"	26' 10"	23' 6"	19' 9"
		16	38' 9"	30' 9"	26' 10"	26' 10"	23' 6"	19' 9"	24' 6"	21' 4"	18' 0"
		24	33' 10"	26' 10"	23' 6"	23' 6"	20' 7"	17' 3"	21' 4"	18' 8"	15' 9"
600S250-54	50	12	46' 3"	36' 8"	32' 1"	32' 1"	28' 0"	23' 7"	29' 1"	25' 6"	21' 6"
		16	42' 0"	33' 4"	29' 1"	29' 1"	25' 6"	21' 6"	26' 6"	23' 1"	19' 6"
		24	36' 8"	29' 1"	25' 6"	25' 6"	22' 2"	18' 9"	23' 1"	20' 2"	17' 0"
600S250-68	50	12	49' 10"	39' 7"	34' 7"	34' 7"	30' 2"	25' 6"	31' 4"	27' 4"	23' 1"
		16	45' 3"	36' 0"	31' 4"	31' 4"	27' 4"	23' 1"	28' 6"	24' 10"	21' 0"
		24	39' 7"	31' 4"	27' 4"	27' 4"	24' 0"	20' 2"	24' 10"	21' 9"	18' 4"
600S250-97	50	12	55' 4"	44' 0"	38' 4"	38' 4"	33' 7"	28' 3"	34' 10"	30' 6"	25' 8"
		16	50' 4"	40' 0"	34' 10"	34' 10"	30' 6"	25' 8"	31' 8"	27' 8"	23' 4"
		24	44' 0"	34' 10"	30' 6"	30' 6"	26' 8"	22' 6"	27' 8"	24' 2"	20' 4"
600S250-118	50	12	58' 8"	46' 7"	40' 8"	40' 8"	35' 7"	30' 0"	37' 0"	32' 3"	27' 2"
		16	53' 3"	42' 3"	37' 0"	37' 0"	32' 3"	27' 2"	33' 7"	29' 3"	24' 9"
		24	46' 7"	37' 0"	32' 3"	32' 3"	28' 2"	23' 9"	29' 3"	25' 7"	21' 7"
600S300-54	50	12	47' 3"	37' 6"	32' 9"	32' 9"	28' 7"	24' 2"	29' 9"	26' 0"	22' 0"
		16	43' 0"	34' 1"	29' 9"	29' 9"	26' 0"	22' 0"	27' 1"	23' 7"	19' 10"
		24	37' 6"	29' 9"	26' 0"	26' 0"	22' 8"	19' 2"	23' 7"	20' 8"	17' 4"
600S300-68	50	12	51' 7"	40' 10"	35' 8"	35' 8"	31' 2"	26' 3"	32' 6"	28' 4"	23' 10"
		16	46' 9"	37' 2"	32' 6"	32' 6"	28' 4"	23' 10"	29' 6"	25' 9"	21' 8"
		24	40' 10"	32' 6"	28' 4"	28' 4"	24' 9"	20' 10"	25' 9"	22' 6"	19' 0"
600S300-97	50	12	57' 9"	45' 9"	40' 0"	40' 0"	35' 0"	29' 6"	36' 4"	31' 9"	26' 9"
		16	52' 6"	41' 7"	36' 4"	36' 4"	31' 9"	26' 9"	33' 1"	28' 10"	24' 4"
		24	45' 9"	36' 4"	31' 9"	31' 9"	27' 9"	23' 4"	28' 10"	25' 2"	21' 3"
600S300-118	50	12	61' 3"	48' 8"	42' 6"	42' 6"	37' 1"	31' 3"	38' 7"	33' 8"	28' 6"
		16	55' 8"	44' 2"	38' 7"	38' 7"	33' 8"	28' 6"	35' 1"	30' 8"	25' 10"
		24	48' 8"	38' 7"	33' 8"	33' 8"	29' 6"	24' 10"	30' 8"	26' 9"	22' 7"

Notes:
1. 5 psf, 7.5 psf and 10 psf loads have not been reduced for strength or deflection checks. Full lateral load is applied.
2. Heights are based on continuous support of each flange over the full length of the stud.
3. Web crippling checks are based on end-one flange loading condition using 1-inch end bearing.
4. "e" web stiffeners required both ends.
5. Allowable Flexural Strength is based on lateral and torsional bracing at a max 48" o.c.
6. Limiting heights are based on steel properties only (non-composite)

For more information, please contact Marino\WARE® Technical Services at 866.545.1545
This technical information reflects the most current information available and supersedes any and all
previous publications effective February 17, 2023 | MW-Cold Formed Catalog | © WARE Industries, Inc., 2023

INTERIOR LIMITING HEIGHTS

MEMBER	F_y (ksi)	SPACING (in.) o.c.	5 psf			7.5 psf			10 psf		
			L/120	L/240	L/360	L/120	L/240	L/360	L/240	L/360	L/600
800S137-33	33	12	36' 10"e	34' 0"e	29' 8"e	29' 8"e	26' 0"e	21' 10"e	26' 1"e	23' 7"e	19' 10"e
		16	32' 0"e	30' 10"e	27' 0"e	26' 1"e	23' 7"e	19' 10"e	22' 7"e	21' 4"e	18' 1"e
		24	26' 1"e	26' 1"e	23' 7"e	21' 3"e	20' 7"e	17' 4"e	18' 6"e	18' 6"e	15' 9"e
800S137-43	33	12	44' 8"	37' 6"	32' 8"	32' 8"	28' 7"	24' 1"	29' 8"	26' 0"	21' 10"
		16	38' 8"	34' 1"	29' 8"	29' 8"	26' 0"	21' 10"	27' 0"	23' 7"	19' 10"
		24	31' 7"	29' 8"	26' 0"	25' 9"	22' 8"	19' 1"	22' 4"	20' 7"	17' 4"
800S137-43	50	12	46' 9"	37' 1"	32' 6"	32' 6"	28' 4"	23' 10"	29' 6"	25' 9"	21' 8"
		16	42' 6"	33' 9"	29' 6"	29' 6"	25' 9"	21' 8"	26' 9"	23' 4"	19' 8"
		24	35' 10"	29' 6"	25' 9"	25' 9"	22' 6"	19' 0"	23' 4"	20' 4"	17' 2"
800S137-54	50	12	50' 8"	40' 3"	35' 2"	35' 2"	30' 8"	25' 10"	32' 0"	27' 10"	23' 7"
		16	46' 1"	36' 7"	32' 0"	32' 0"	27' 10"	23' 7"	29' 0"	25' 4"	21' 4"
		24	40' 3"	32' 0"	27' 10"	27' 10"	24' 4"	20' 7"	25' 4"	22' 2"	18' 8"
800S137-68	50	12	54' 10"	43' 7"	38' 0"	38' 0"	33' 2"	28' 0"	34' 7"	30' 2"	25' 6"
		16	49' 10"	39' 7"	34' 7"	34' 7"	30' 2"	25' 6"	31' 4"	27' 4"	23' 1"
		24	43' 7"	34' 7"	30' 2"	30' 2"	26' 4"	22' 3"	27' 4"	24' 0"	20' 2"
800S137-97	50	12	60' 10"	48' 3"	42' 2"	42' 2"	36' 10"	31' 1"	38' 3"	33' 6"	28' 2"
		16	55' 3"	43' 10"	38' 3"	38' 3"	33' 6"	28' 2"	34' 9"	30' 4"	25' 8"
		24	48' 3"	38' 3"	33' 6"	33' 6"	29' 3"	24' 8"	30' 4"	26' 7"	22' 4"
800S162-33	33	12	40' 3"e	35' 4"e	30' 10"e	30' 10"e	27' 0"e	22' 9"e	28' 1"e	24' 7"e	20' 8"e
		16	34' 10"e	32' 2"e	28' 1"e	28' 1"e	24' 7"e	20' 8"e	24' 8"e	22' 3"e	18' 9"e
		24	28' 6"e	28' 1"e	24' 7"e	23' 3"e	21' 6"e	18' 1"e	20' 1"e	19' 6"e	16' 4"e
800S162-43	33	12	48' 6"	39' 0"	34' 1"	34' 1"	29' 8"	25' 1"	30' 10"	27' 0"	22' 9"
		16	42' 0"	35' 4"	30' 10"	30' 10"	27' 0"	22' 9"	28' 1"	24' 7"	20' 8"
		24	34' 3"	30' 10"	27' 0"	27' 0"	23' 7"	19' 10"	24' 2"	21' 6"	18' 1"
800S162-43	50	12	48' 8"	38' 8"	33' 9"	33' 9"	29' 6"	24' 10"	30' 8"	26' 9"	22' 7"
		16	44' 3"	35' 1"	30' 8"	30' 8"	26' 9"	22' 7"	27' 10"	24' 4"	20' 7"
		24	38' 8"	30' 8"	26' 9"	26' 9"	23' 4"	19' 9"	24' 4"	21' 3"	18' 0"
800S162-54	50	12	52' 9"	41' 10"	36' 7"	36' 7"	32' 0"	27' 0"	33' 3"	29' 1"	24' 6"
		16	48' 0"	38' 1"	33' 3"	33' 3"	29' 1"	24' 6"	30' 2"	26' 4"	22' 3"
		24	41' 10"	33' 3"	29' 1"	29' 1"	25' 4"	21' 4"	26' 4"	23' 1"	19' 4"
800S162-68	50	12	57' 1"	45' 3"	39' 7"	39' 7"	34' 7"	29' 2"	36' 0"	31' 4"	26' 6"
		16	51' 10"	41' 2"	36' 0"	36' 0"	31' 4"	26' 6"	32' 8"	28' 6"	24' 1"
		24	45' 3"	36' 0"	31' 4"	31' 4"	27' 4"	23' 1"	28' 6"	24' 10"	21' 0"
800S162-97	50	12	63' 4"	50' 3"	44' 0"	44' 0"	38' 4"	32' 4"	39' 10"	34' 10"	29' 4"
		16	57' 7"	45' 8"	39' 10"	39' 10"	34' 10"	29' 4"	36' 3"	31' 8"	26' 8"
		24	50' 3"	39' 10"	34' 10"	34' 10"	30' 6"	25' 8"	31' 8"	27' 8"	23' 4"
800S162-118	50	12	67' 1"	53' 2"	46' 6"	46' 6"	40' 7"	34' 3"	42' 2"	36' 10"	31' 1"
		16	60' 10"	48' 4"	42' 2"	42' 2"	36' 10"	31' 1"	38' 4"	33' 6"	28' 3"
		24	53' 2"	42' 2"	36' 10"	36' 10"	32' 2"	27' 2"	33' 6"	29' 3"	24' 8"
800S200-43	33	12	51' 9"	41' 1"	35' 10"	35' 10"	31' 4"	26' 6"	32' 7"	28' 6"	24' 0"
		16	45' 1"	37' 4"	32' 7"	32' 7"	28' 6"	24' 0"	29' 8"	25' 10"	21' 9"
		24	36' 9"	32' 7"	28' 6"	28' 6"	24' 10"	21' 0"	25' 10"e	22' 7"	19' 1"
800S200-43	50	12	51' 9"	41' 1"	35' 10"	35' 10"	31' 4"	26' 6"	32' 7"	28' 6"	24' 0"
		16	47' 1"	37' 4"	32' 7"	32' 7"	28' 6"	24' 0"	29' 8"	25' 10"	21' 9"
		24	41' 1"	32' 7"	28' 6"	28' 6"	24' 10"	21' 0"	25' 10"	22' 7"	19' 1"
800S200-54	50	12	55' 7"	44' 2"	38' 7"	38' 7"	33' 8"	28' 4"	35' 1"	30' 7"	25' 9"
		16	50' 7"	40' 1"	35' 1"	35' 1"	30' 7"	25' 9"	31' 10"	27' 9"	23' 6"
		24	44' 2"	35' 1"	30' 7"	30' 7"	26' 9"	22' 7"	27' 9"	24' 3"	20' 6"
800S200-68	50	12	59' 9"	47' 4"	41' 4"	41' 4"	36' 2"	30' 6"	37' 7"	32' 10"	27' 8"
		16	54' 3"	43' 1"	37' 7"	37' 7"	32' 10"	27' 8"	34' 2"	29' 10"	25' 2"
		24	47' 4"	37' 7"	32' 10"	32' 10"	28' 8"	24' 2"	29' 10"	26' 1"	22' 0"
800S200-97	50	12	66' 6"	52' 9"	46' 1"	46' 1"	40' 3"	34' 0"	41' 10"	36' 7"	30' 10"
		16	60' 4"	47' 10"	41' 10"	41' 10"	36' 7"	30' 10"	38' 0"	33' 2"	28' 0"
		24	52' 9"	41' 10"	36' 7"	36' 7"	32' 0"	27' 0"	33' 2"	29' 0"	24' 6"
800S200-118	50	12	70' 4"	55' 10"	48' 9"	48' 9"	42' 8"	36' 0"	44' 4"	38' 9"	32' 8"
		16	64' 0"	50' 9"	44' 4"	44' 4"	38' 9"	32' 8"	40' 3"	35' 2"	29' 8"
		24	55' 10"	44' 4"	38' 9"	38' 9"	33' 10"	28' 7"	35' 2"	30' 9"	25' 10"
800S250-43	33	12	53' 4"	42' 10"	37' 6"	37' 6"	32' 8"	27' 7"	34' 0"	29' 8"	25' 1"
		16	46' 2"	39' 0"	34' 0"	34' 0"	29' 8"	25' 1"	30' 10"	27' 0"	22' 9"
		24	37' 8"	34' 0"	29' 8"	29' 8"	26' 0"	21' 10"	26' 8"e	23' 7"	19' 10"
800S250-43	50	12	53' 6"	42' 4"	37' 1"	37' 1"	32' 4"	27' 3"	33' 8"	29' 4"	24' 9"
		16	48' 7"	38' 7"	33' 8"	33' 8"	29' 4"	24' 9"	30' 7"	26' 8"	22' 6"
		24	42' 4"	33' 8"	29' 4"	29' 4"	25' 8"	21' 8"	26' 8"	23' 4"	19' 8"
800S250-54	50	12	57' 9"	45' 10"	40' 1"	40' 1"	35' 0"	29' 6"	36' 4"	31' 9"	26' 9"
		16	52' 6"	41' 8"	36' 4"	36' 4"	31' 9"	26' 9"	33' 1"	28' 10"	24' 4"
		24	45' 10"	36' 4"	31' 9"	31' 9"	27' 9"	23' 6"	28' 10"	25' 3"	21' 3"
800S250-68	50	12	62' 4"	49' 6"	43' 3"	43' 3"	37' 9"	31' 10"	39' 3"	34' 3"	29' 0"
		16	56' 8"	45' 0"	39' 3"	39' 3"	34' 3"	29' 0"	35' 8"	31' 2"	26' 3"
		24	49' 6"	39' 3"	34' 3"	34' 3"	30' 0"	25' 3"	31' 2"	27' 3"	23' 0"
800S250-97	50	12	69' 6"	55' 1"	48' 2"	48' 2"	42' 1"	35' 6"	43' 9"	38' 2"	32' 2"
		16	63' 1"	50' 1"	43' 9"	43' 9"	38' 2"	32' 2"	39' 9"	34' 8"	29' 3"
		24	55' 1"	43' 9"	38' 2"	38' 2"	33' 4"	28' 2"	34' 8"	30' 3"	25' 7"
800S250-118	50	12	73' 8"	58' 6"	51' 1"	51' 1"	44' 7"	37' 7"	46' 4"	40' 6"	34' 2"
		16	66' 10"	53' 1"	46' 4"	46' 4"	40' 6"	34' 2"	42' 2"	36' 9"	31' 1"
		24	58' 6"	46' 4"	40' 6"	40' 6"	35' 4"	29' 10"	36' 9"	32' 2"	27' 1"
800S300-54	50	12	59' 0"	46' 9"	40' 10"	40' 10"	35' 8"	30' 1"	37' 2"	32' 6"	27' 4"
		16	53' 7"	42' 7"	37' 2"	37' 2"	32' 6"	27' 4"	33' 9"	29' 6"	24' 10"
		24	46' 9"	37' 2"	32' 6"	32' 6"	28' 4"	23' 10"	29' 6"	25' 9"	21' 8"
800S300-68	50	12	64' 3"	51' 0"	44' 7"	44' 7"	38' 10"	32' 9"	40' 6"	35' 4"	29' 9"
		16	58' 4"	46' 4"	40' 6"	40' 6"	35' 4"	29' 9"	36' 9"	32' 1"	27' 1"
		24	51' 0"	40' 6"	35' 4"	35' 4"	30' 10"	26' 1"	32' 1"	28' 1"	23' 8"
800S300-97	50	12	72' 1"	57' 2"	50' 0"	50' 0"	43' 8"	36' 9"	45' 4"	39' 8"	33' 6"
		16	65' 6"	52' 0"	45' 4"	45' 4"	39' 8"	33' 6"	41' 3"	36' 1"	30' 4"
		24	57' 2"	45' 4"	39' 8"	39' 8"	34' 8"	29' 2"	36' 1"	31' 6"	26' 7"
800S300-118	50	12	76' 7"	60' 9"	53' 1"	53' 1"	46' 4"	39' 2"	48' 3"	42' 2"	35' 7"
		16	69' 7"	55' 3"	48' 3"	48' 3"	42' 2"	35' 7"	43' 10"	38' 3"	32' 3"
		24	60' 9"	48' 3"	42' 2"	42' 2"	36' 9"	31' 1"	38' 3"	33' 6"	28' 2"

Notes:
1. 5 psf, 7.5 psf and 10 psf loads have not been reduced for strength or deflection checks. Full lateral load is applied.
2. Heights are based on continuous support of each flange over the full length of the stud.
3. Web crippling checks are based on end-one flange loading condition using 1-inch end bearing.
4. "e" web stiffeners required both ends.
5. Allowable Flexural Strength is based on lateral and torsional bracing at a max 48" o.c.
6. Limiting heights are based on steel properties only (non-composite)

CURTAINWALL LIMITING HEIGHTS - SINGLE SPAN

NOTES:

1. Listed wind pressures represent the calculated design wind pressure (1.0W based on 2009 IBC or 0.6W based on 2012 IBC and later editions). For deflection calculations, the listed wind pressures have been multiplied by 0.70 as per IBC.
2. Studs must be braced against rotation and lateral displacement at all supports.
3. Studs are assumed to be adequately braced at a maximum spacing of L_μ to develop the dull allowable moment, M_a.
4. Web crippling check is based on 1" of bearing at end supports and 3" of bearing at interior support.
5. Shear and web crippling capacity at end supports have NOT been reduced for punchouts. At interior support, the shear and web crippling capacity has been reduced for the presence of punchout adjacent to the supports.
6. Combined bending and shear check at interior support is based on unreinforced web as per AISI S100. The shear and combined bending and shear check at interior support have been reduced for the presence of punchouts adjacent to the support.
7. Listed "Double Span" limiting heights are based on the distance from wither end to the center of the interior support, with the stud continuous past the interior support.
8. "e" - web stiffeners required at ends.
9. See General Notes on Page 6.

MEMBER	F_y (ksi)	SPACING (in.) o.c.	15 psf			20 psf			25 psf			30 psf			35 psf			40 psf			50 psf		
			L/240	L/360	L/600	L/240	L/360	L/600	L/240	L/360	L/600	L/240	L/360	L/600	L/240	L/360	L/600	L/240	L/360	L/600	L/240	L/360	L/600
362S137-33	33	12	14' 1"	12' 7"	10' 7"	12' 2"	11' 4"	9' 7"	10' 10"	10' 7"	9' 0"	9' 10"	9' 10"	8' 4"	9' 2"	9' 2"	8' 0"	8' 7"e	8' 7"e	7' 8"	7' 8"e	7' 8"e	7' 1"e
		16	12' 2"	11' 4"	9' 7"	10' 6"	10' 4"	8' 9"	9' 4"	9' 4"	8' 1"	8' 7"e	8' 7"e	7' 8"	8' 0"e	8' 0"e	7' 3"e	7' 6"e	7' 6"e	7' 0"e	6' 8"e	6' 8"e	6' 6"e
		24	9' 10"	9' 10"	8' 4"	8' 7"e	8' 7"e	7' 8"	7' 8"e	7' 8"e	7' 1"e	7' 0"e	7' 0"e	6' 8"e	6' 6"e	6' 6"e	6' 4"e	6' 1"e	6' 1"e	6' 1"e	5' 4"e	5' 4"e	5' 4"e
362S137-43	33	12	15' 8"	13' 8"	11' 6"	14' 2"	12' 4"	10' 6"	12' 10"	11' 6"	9' 8"	11' 9"	10' 10"	9' 2"	10' 10"	10' 3"	8' 8"	10' 2"	9' 10"	8' 3"	9' 1"	9' 1"	7' 8"
		16	14' 2"	12' 4"	10' 6"	12' 6"	11' 3"	9' 6"	11' 2"	10' 6"	8' 9"	10' 2"	9' 10"	8' 3"	9' 6"	9' 4"	7' 10"	8' 9"	8' 9"	7' 7"	7' 10"	7' 10"	7' 0"
		24	11' 9"	10' 10"	9' 2"	10' 2"	9' 10"	8' 3"	9' 1"	9' 1"	7' 8"	8' 3"	8' 3"	7' 3"	7' 8"	7' 8"	6' 10"	7' 2"e	7' 2"e	6' 7"	6' 6"e	6' 6"e	6' 1"e
362S137-43	50	12	15' 8"	13' 8"	11' 6"	14' 2"	12' 4"	10' 6"	13' 2"	11' 6"	9' 8"	12' 4"	10' 10"	9' 2"	11' 9"	10' 3"	8' 8"	11' 3"	9' 10"	8' 3"	10' 6"	9' 2"	7' 8"
		16	14' 2"	12' 4"	10' 6"	12' 10"	11' 3"	9' 6"	12' 0"	10' 6"	8' 9"	11' 3"	9' 10"	8' 3"	10' 8"	9' 4"	7' 10"	10' 2"	9' 0"	7' 7"	9' 1"	8' 3"	7' 0"
		24	12' 4"	10' 10"	9' 2"	11' 3"	9' 10"	8' 3"	10' 6"	9' 2"	7' 8"	9' 7"	8' 7"	7' 3"	8' 10"	8' 2"	6' 10"	8' 3"	7' 9"	6' 7"	7' 4"	7' 3"	6' 1"
362S137-54	50	12	16' 9"	14' 8"	12' 4"	15' 2"	13' 3"	11' 2"	14' 1"	12' 4"	10' 4"	13' 3"	11' 7"	9' 9"	12' 7"	11' 0"	9' 3"	12' 1"	10' 7"	8' 10"	11' 2"	9' 9"	8' 3"
		16	15' 2"	13' 3"	11' 2"	13' 9"	12' 1"	10' 2"	12' 10"	11' 2"	9' 6"	12' 1"	10' 7"	8' 10"	11' 6"	10' 0"	8' 6"	11' 0"	9' 7"	8' 1"	10' 2"	8' 10"	7' 6"
		24	13' 3"	11' 7"	9' 9"	12' 1"	10' 7"	8' 10"	11' 2"	9' 9"	8' 3"	10' 7"	9' 2"	7' 9"	10' 0"	8' 9"	7' 4"	9' 7"	8' 4"	7' 1"	8' 7"	7' 9"	6' 7"
362S137-68	50	12	17' 10"	15' 8"	13' 2"	16' 3"	14' 2"	12' 0"	15' 1"	13' 2"	11' 1"	14' 2"	12' 4"	10' 6"	13' 6"	11' 9"	10' 0"	12' 10"	11' 3"	9' 6"	12' 0"	10' 6"	8' 9"
		16	16' 3"	14' 2"	12' 0"	14' 9"	12' 10"	10' 10"	13' 8"	12' 0"	10' 1"	12' 10"	11' 3"	9' 6"	12' 3"	10' 8"	9' 0"	11' 8"	10' 3"	8' 8"	10' 10"	9' 6"	8' 0"
		24	14' 2"	12' 4"	10' 6"	12' 10"	11' 3"	9' 6"	12' 0"	10' 6"	8' 9"	11' 3"	9' 10"	8' 3"	10' 8"	9' 4"	7' 10"	10' 3"	9' 0"	7' 7"	9' 6"	8' 3"	7' 0"
362S137-97	50	12	19' 8"	17' 2"	14' 6"	17' 10"	15' 8"	13' 2"	16' 7"	14' 6"	12' 3"	15' 8"	13' 8"	11' 6"	14' 10"	13' 0"	11' 0"	14' 2"	12' 4"	10' 6"	13' 2"	11' 6"	9' 8"
		16	17' 10"	15' 8"	13' 2"	16' 3"	14' 2"	12' 0"	15' 1"	13' 2"	11' 1"	14' 2"	12' 4"	10' 6"	13' 6"	11' 9"	10' 0"	12' 10"	11' 3"	9' 6"	12' 0"	10' 6"	8' 9"
		24	15' 8"	13' 8"	11' 6"	14' 2"	12' 4"	10' 6"	13' 2"	11' 6"	9' 8"	12' 4"	10' 10"	9' 2"	11' 9"	10' 3"	8' 8"	11' 3"	9' 10"	8' 3"	10' 6"	9' 2"	7' 8"
362S162-33	33	12	15' 1"	13' 2"	11' 1"	13' 1"	12' 0"	10' 1"	11' 9"	11' 1"	9' 4"	10' 8"	10' 6"	8' 9"	9' 10"e	9' 10"e	8' 4"	9' 3"e	9' 3"e	8' 0"	8' 3"e	8' 3"e	7' 4"e
		16	13' 1"	12' 0"	10' 1"	11' 4"	10' 10"	9' 2"	10' 2"e	10' 1"e	8' 6"	9' 3"e	9' 3"e	8' 0"	8' 7"e	8' 7"e	7' 7"e	8' 1"e	8' 1"e	7' 3"e	7' 2"e	7' 2"e	6' 9"e
		24	10' 8"	10' 6"	8' 9"	9' 3"e	9' 3"e	8' 0"	8' 3"e	8' 3"e	7' 4"e	7' 7"e	7' 7"e	7' 0"e	7' 0"e	7' 0"e	6' 8"e	6' 7"e	6' 7"e	6' 4"e	5' 10"e	5' 10"e	5' 10"e
362S162-43	33	12	16' 4"	14' 3"	12' 1"	14' 10"	13' 0"	11' 0"	13' 10"	12' 1"	10' 2"	12' 8"	11' 4"	9' 7"	11' 9"	10' 9"	9' 1"	11' 0"	10' 3"	8' 8"	9' 9"	9' 7"	8' 1"
		16	14' 10"	13' 0"	11' 0"	13' 6"	11' 9"	10' 0"	12' 1"	11' 0"	9' 3"	11' 0"	10' 3"	8' 8"	10' 2"	9' 9"	8' 3"	9' 6"	9' 4"	7' 10"	8' 6"e	8' 6"e	7' 4"
		24	12' 8"	11' 4"	9' 7"	11' 0"	10' 3"	8' 8"	9' 9"	9' 7"	8' 1"	9' 0"	9' 0"	7' 7"	8' 3"e	8' 3"e	7' 2"	7' 9"e	7' 9"e	6' 10"e	7' 0"e	7' 0"e	6' 4"e
362S162-43	50	12	16' 4"	14' 3"	12' 1"	14' 10"	13' 0"	11' 0"	13' 10"	12' 1"	10' 2"	13' 0"	11' 4"	9' 7"	12' 4"	10' 9"	9' 1"	11' 9"	10' 3"	8' 8"	11' 0"	9' 7"	8' 1"
		16	14' 10"	13' 0"	11' 0"	13' 7"	11' 9"	10' 0"	12' 7"	11' 0"	9' 3"	11' 9"	10' 3"	8' 8"	11' 3"	9' 9"	8' 3"	10' 9"	9' 4"	7' 10"	9' 9"	8' 8"	7' 4"
		24	13' 0"	11' 4"	9' 7"	11' 9"	10' 3"	8' 8"	11' 0"	9' 7"	8' 1"	10' 3"	9' 0"	7' 7"	9' 7"	8' 7"	7' 2"	9' 0"	8' 2"	6' 10"	8' 0"	7' 7"	6' 4"
362S162-54	50	12	17' 7"	15' 4"	13' 0"	16' 0"	14' 0"	11' 9"	14' 9"	13' 0"	10' 10"	14' 0"	12' 2"	10' 3"	13' 3"	11' 7"	9' 9"	12' 8"	11' 1"	9' 3"	11' 9"	10' 3"	8' 8"
		16	16' 0"	14' 0"	11' 9"	14' 6"	12' 8"	10' 8"	13' 6"	11' 9"	9' 10"	12' 8"	11' 1"	9' 3"	12' 1"	10' 6"	8' 10"	11' 6"	10' 1"	8' 6"	10' 8"	9' 3"	7' 10"
		24	14' 0"	12' 2"	10' 3"	12' 8"	11' 1"	9' 3"	11' 9"	10' 3"	8' 8"	11' 1"	9' 8"	8' 2"	10' 6"	9' 2"	7' 9"	10' 1"	8' 9"	7' 4"	9' 3"	8' 2"	6' 10"
362S162-68	50	12	18' 9"	16' 4"	13' 10"	17' 1"	14' 10"	12' 7"	15' 10"	13' 10"	11' 8"	14' 10"	13' 1"	11' 0"	14' 2"	12' 4"	10' 6"	13' 7"	11' 10"	10' 0"	12' 7"	11' 0"	9' 3"
		16	17' 1"	14' 10"	12' 7"	15' 6"	13' 7"	11' 6"	14' 4"	12' 7"	10' 7"	13' 7"	11' 10"	10' 0"	12' 10"	11' 3"	9' 6"	12' 3"	10' 9"	9' 1"	11' 6"	10' 0"	8' 4"
		24	14' 10"	13' 1"	11' 0"	13' 7"	11' 10"	10' 0"	12' 7"	11' 0"	9' 3"	11' 10"	10' 4"	8' 8"	11' 3"	9' 9"	8' 3"	10' 9"	9' 4"	7' 10"	10' 0"	8' 8"	7' 4"
362S162-97	50	12	20' 9"	18' 1"	15' 3"	18' 10"	16' 6"	13' 10"	17' 6"	15' 3"	12' 10"	16' 6"	14' 4"	12' 1"	15' 8"	13' 8"	11' 6"	15' 0"	13' 1"	11' 0"	13' 10"	12' 1"	10' 2"
		16	18' 10"	16' 6"	13' 10"	17' 1"	15' 0"	12' 7"	15' 10"	13' 10"	11' 8"	15' 0"	13' 1"	11' 0"	14' 2"	12' 4"	10' 6"	13' 7"	11' 10"	10' 0"	12' 7"	11' 0"	9' 3"
		24	16' 6"	14' 4"	12' 1"	15' 0"	13' 1"	11' 0"	13' 10"	12' 1"	10' 2"	13' 1"	11' 4"	9' 7"	12' 4"	10' 10"	9' 2"	11' 10"	10' 4"	8' 9"	11' 0"	9' 7"	8' 1"
362S162-118	50	12	21' 10"	19' 1"	16' 1"	19' 10"	17' 4"	14' 7"	18' 4"	16' 1"	13' 7"	17' 4"	15' 2"	12' 9"	16' 6"	14' 4"	12' 1"	15' 9"	13' 9"	11' 7"	14' 7"	12' 9"	10' 9"
		16	19' 10"	17' 4"	14' 7"	18' 0"	15' 9"	13' 3"	16' 9"	14' 7"	12' 3"	15' 9"	13' 9"	11' 7"	15' 0"	13' 1"	11' 0"	14' 3"	12' 6"	10' 7"	13' 3"	11' 7"	9' 9"
		24	17' 4"	15' 2"	12' 9"	15' 9"	13' 9"	11' 7"	14' 7"	12' 9"	10' 9"	13' 9"	12' 0"	10' 1"	13' 1"	11' 4"	9' 7"	12' 6"	10' 10"	9' 2"	11' 7"	10' 1"	8' 7"
362S200-33	33	12	15' 10"	13' 10"	11' 8"	13' 10"	12' 7"	10' 8"	12' 4"	11' 8"	9' 10"	11' 4"e	11' 0"e	9' 3"	10' 6"e	10' 6"e	8' 9"	9' 9"e	9' 9"e	8' 6"e	8' 9"e	8' 9"e	7' 10"e
		16	13' 10"	12' 7"	10' 8"	12' 1"	11' 6"	9' 8"	10' 9"e	10' 8"e	9' 0"	9' 9"e	9' 9"e	8' 6"e	9' 1"e	9' 1"e	8' 0"e	8' 6"e	8' 6"e	7' 8"e	7' 7"e	7' 7"e	7' 1"e
		24	11' 4"e	11' 0"e	9' 3"	9' 9"e	9' 9"e	8' 6"e	8' 9"e	8' 9"e	7' 10"e	8' 0"e	8' 0"e	7' 4"e	7' 4"e	7' 4"e	7' 0"e	7' 0"e	7' 0"e	6' 8"e	6' 2"e	6' 2"e	6' 2"e
362S200-43	33	12	17' 3"	15' 2"	12' 9"	15' 9"	13' 9"	11' 7"	14' 7"	12' 9"	10' 9"	13' 8"	12' 0"	10' 1"	12' 7"	11' 4"	9' 7"	11' 9"	10' 10"	9' 2"	10' 7"	10' 1"	8' 7"
		16	15' 9"	13' 9"	11' 7"	14' 3"	12' 6"	10' 6"	13' 0"	11' 7"	9' 9"	11' 9"	10' 10"	9' 2"	10' 10"	10' 4"	8' 9"	10' 2"	9' 10"	8' 4"	9' 2"e	9' 2"e	7' 9"
		24	13' 8"	12' 0"	10' 1"	11' 9"	10' 10"	9' 2"	10' 7"	10' 1"	8' 7"	9' 8"e	9' 6"e	8' 1"	8' 10"e	8' 10"e	7' 7"	8' 4"e	8' 4"e	7' 3"e	7' 6"e	7' 6"e	6' 9"e
362S200-43	50	12	17' 3"	15' 2"	12' 9"	15' 9"	13' 9"	11' 7"	14' 7"	12' 9"	10' 9"	13' 9"	12' 0"	10' 1"	13' 1"	11' 4"	9' 7"	12' 6"	10' 10"	9' 2"	11' 7"	10' 1"	8' 7"
		16	15' 9"	13' 9"	11' 7"	14' 3"	12' 6"	10' 6"	13' 3"	11' 7"	9' 9"	12' 6"	10' 10"	9' 2"	11' 10"	10' 4"	8' 9"	11' 4"	9' 10"	8' 4"	10' 6"	9' 2"	7' 9"
		24	13' 9"	12' 0"	10' 1"	12' 6"	10' 10"	9' 2"	11' 7"	10' 1"	8' 7"	10' 10"	9' 6"	8' 1"	10' 3"	9' 1"	7' 7"	9' 7"	8' 8"	7' 3"	8' 7"e	8' 1"	6' 9"
362S200-54	50	12	18' 7"	16' 2"	13' 8"	16' 10"	14' 9"	12' 4"	15' 8"	13' 8"	11' 7"	14' 9"	12' 10"	10' 10"	14' 0"	12' 2"	10' 3"	13' 4"	11' 8"	9' 10"	12' 4"	10' 10"	9' 2"
		16	16' 10"	14' 9"	12' 4"	15' 4"	13' 4"	11' 3"	14' 3"	12' 4"	10' 6"	13' 4"	11' 8"	9' 10"	12' 8"	11' 1"	9' 4"	12' 2"	10' 7"	9' 0"	11' 3"	9' 10"	8' 3"
		24	14' 9"	12' 10"	10' 10"	13' 4"	11' 8"	9' 10"	12' 4"	10' 10"	9' 2"	11' 8"	10' 2"	8' 7"	11' 1"	9' 8"	8' 2"	10' 7"	9' 3"	7' 9"	9' 10"	8' 7"	7' 3"
362S200-68	50	12	19' 10"	17' 4"	14' 8"	18' 1"	15' 9"	13' 3"	16' 9"	14' 8"	12' 4"	15' 9"	13' 9"	11' 7"	15' 0"	13' 1"	11' 1"	14' 4"	12' 6"	10' 7"	13' 3"	11' 7"	9' 9"
		16	18' 1"	15' 9"	13' 3"	16' 4"	14' 4"	12' 1"	15' 3"	13' 3"	11' 2"	14' 4"	12' 6"	10' 7"	13' 7"	11' 10"	10' 1"	13' 0"	11' 4"	9' 7"	12' 1"	10' 7"	8' 10"
		24	15' 9"	13' 9"	11' 7"	14' 4"	12' 6"	10' 7"	13' 3"	11' 7"	9' 9"	12' 6"	11' 0"	9' 2"	11' 10"	10' 4"	8' 9"	11' 4"	10' 0"	8' 4"	10' 7"	9' 2"	7' 9"
362S200-97	50	12	22' 0"	19' 2"	16' 2"	20' 0"	17' 6"	14' 8"	18' 7"	16' 2"	13' 8"	17' 6"	15' 3"	12' 10"	16' 7"	14' 6"	12' 2"	15' 10"	13' 10"	11' 8"	14' 8"	12' 10"	10' 10"
		16	20' 0"	17' 6"	14' 8"	18' 2"	15' 10"	13' 4"	16' 10"	14' 8"	12' 4"	15' 10"	13' 10"	11' 8"	15' 1"	13' 2"	11' 1"	14' 4"	12' 7"	10' 7"	13' 4"	11' 8"	9' 10"
		24	17' 6"	15' 3"	12' 10"	15' 10"	13' 10"	11' 8"	14' 8"	12' 10"	10' 10"	13' 10"	12' 1"	10' 2"	13' 2"	11' 6"	9' 8"	12' 7"	11' 0"	9' 3"	11' 8"	10' 2"	8' 7"
362S200-118	50	12	23' 2"	20' 3"	17' 1"	21' 1"	18' 4"	15' 6"	19' 7"	17' 1"	14' 4"	18' 4"	16' 1"	13' 7"	17' 6"	15' 3"	12' 10"	16' 8"	14' 7"	12' 3"	15' 6"	13' 7"	11' 6"
		16	21' 1"	18' 4"	15' 6"	19' 2"	16' 8"	14' 1"	17' 9"	15' 6"	13' 1"	16' 8"	14' 7"	12' 3"	15' 10"	13' 10"	11' 8"	15' 2"	13' 3"	11' 2"	14' 1"	12' 3"	10' 4"
		24	18' 4"	16' 1"	13' 7"	16' 8"	14' 7"	12' 3"	15' 6"	13' 7"	11' 6"	14' 7"	12' 9"	10' 9"	13' 10"	12' 1"	10' 2"	13' 3"	11' 7"	9' 9"	12' 3"	10' 9"	9' 1"
362S250-33	33	12	16' 7"	14' 6"	12' 2"	14' 4"	13' 2"	11' 1"	12' 10"	12' 2"	10' 3"	11' 9"e	11' 6"e	9' 8"	10' 10"e	10' 10"e	9' 2"	10' 2"e	10' 2"e	8' 9"e	9' 1"e	9' 1"e	8' 2"e
		16	14' 4"	13' 2"	11' 1"	12' 6"e	12' 0"	10' 1"	11' 2"e	11' 1"e	9' 4"	10' 2"e	10' 2"e	8' 9"e	9' 4"e	9' 4"e	8' 4"e	8' 9"e	8' 9"e	8' 0"e	7' 10"e	7' 10"e	7' 4"e
		24	11' 9"e	11' 6"e	9' 8"	10' 2"e	10' 2"e	8' 9"e	9' 1"e	9' 1"e	8' 2"e	8' 3"e	8' 3"e	7' 8"e	7' 8"e	7' 8"e	7' 3"e	7' 2"e	7' 2"e	7' 0"e	6' 4"e	6' 4"e	6' 4"e

NOTE: See page 18 for Table Notes.

For more information, please contact Marino\WARE® Technical Services at 866.545.1545
This technical information reflects the most current information available and supersedes any and all
previous publications effective February 17, 2023 | MW-Cold Formed Catalog | © WARE Industries, Inc., 2023

CURTAINWALL LIMITING HEIGHTS - SINGLE SPAN

MEMBER	F_y (ksi)	SPACING (in.) o.c.	15 psf			20 psf			25 psf			30 psf			35 psf			40 psf			50 psf		
			L/240	L/360	L/600	L/240	L/360	L/600	L/240	L/360	L/600	L/240	L/360	L/600	L/240	L/360	L/600	L/240	L/360	L/600	L/240	L/360	L/600
362S250-43	33	12	18' 3"	16' 0"	13' 6"	16' 7"	14' 6"	12' 2"	15' 4"	13' 6"	11' 4"	14' 0"	12' 8"	10' 8"	13' 0"	12' 0"	10' 2"	12' 2"	11' 6"	9' 8"	10' 10"	10' 8"	9' 0"
		16	16' 7"	14' 6"	12' 2"	14' 10"	13' 2"	11' 1"	13' 3"	12' 2"	10' 3"	12' 2"	11' 6"	9' 8"	11' 3"	10' 10"	9' 2"	10' 6"e	10' 6"e	8' 9"	9' 4"e	9' 4"e	8' 2"
		24	14' 0"	12' 8"	10' 8"	12' 2"	11' 6"	9' 8"	10' 10"	10' 8"	9' 0"	9' 10"e	9' 10"e	8' 6"	9' 2"e	9' 2"e	8' 1"e	8' 7"e	8' 7"e	7' 8"e	7' 8"e	7' 8"e	7' 2"e
362S250-43	50	12	18' 1"	15' 9"	13' 3"	16' 4"	14' 3"	12' 1"	15' 2"	13' 3"	11' 2"	14' 3"	12' 6"	10' 7"	13' 7"	11' 10"	10' 0"	13' 0"	11' 4"	9' 7"	12' 1"	10' 7"	8' 10"
		16	16' 4"	14' 3"	12' 1"	14' 10"	13' 0"	11' 0"	13' 9"	12' 1"	10' 2"	13' 0"	11' 4"	9' 7"	12' 4"	10' 9"	9' 1"	11' 9"	10' 3"	8' 8"	10' 9"	9' 7"	8' 1"
		24	14' 3"	12' 6"	10' 7"	13' 0"	11' 4"	9' 7"	12' 1"	10' 7"	8' 10"	11' 4"	9' 10"	8' 4"	10' 7"	9' 4"	8' 0"	9' 10"	9' 0"	7' 7"	8' 9"e	8' 4"e	7' 1"
362S250-54	50	12	19' 7"	17' 1"	14' 4"	17' 9"	15' 6"	13' 1"	16' 6"	14' 4"	12' 2"	15' 6"	13' 7"	11' 4"	14' 8"	12' 10"	10' 10"	14' 1"	12' 3"	10' 4"	13' 1"	11' 4"	9' 7"
		16	17' 9"	15' 6"	13' 1"	16' 1"	14' 1"	11' 10"	15' 0"	13' 1"	11' 0"	14' 1"	12' 3"	10' 4"	13' 4"	11' 8"	9' 10"	12' 9"	11' 2"	9' 4"	11' 10"	10' 4"	8' 9"
		24	15' 6"	13' 7"	11' 4"	14' 1"	12' 3"	10' 4"	13' 1"	11' 4"	9' 7"	12' 3"	10' 9"	9' 1"	11' 8"	10' 2"	8' 7"	11' 2"	9' 9"	8' 2"	10' 1"	9' 1"	7' 8"
362S250-68	50	12	21' 0"	18' 4"	15' 6"	19' 1"	16' 8"	14' 1"	17' 8"	15' 6"	13' 1"	16' 8"	14' 7"	12' 3"	15' 10"	13' 10"	11' 8"	15' 2"	13' 3"	11' 2"	14' 1"	12' 3"	10' 4"
		16	19' 1"	16' 8"	14' 1"	17' 4"	15' 2"	12' 9"	16' 1"	14' 1"	11' 10"	15' 2"	13' 3"	11' 2"	14' 4"	12' 7"	10' 7"	13' 9"	12' 0"	10' 2"	12' 9"	11' 2"	9' 4"
		24	16' 8"	14' 7"	12' 3"	15' 2"	13' 3"	11' 2"	14' 1"	12' 3"	10' 4"	13' 3"	11' 7"	9' 9"	12' 7"	11' 0"	9' 3"	12' 0"	10' 6"	8' 10"	11' 2"	9' 9"	8' 2"
362S250-97	50	12	23' 3"	20' 4"	17' 2"	21' 2"	18' 6"	15' 7"	19' 8"	17' 2"	14' 6"	18' 6"	16' 2"	13' 7"	17' 7"	15' 3"	12' 10"	16' 9"	14' 8"	12' 4"	15' 7"	13' 7"	11' 6"
		16	21' 2"	18' 6"	15' 7"	19' 2"	16' 9"	14' 2"	17' 10"	15' 7"	13' 2"	16' 9"	14' 8"	12' 4"	16' 0"	13' 10"	11' 9"	15' 3"	13' 3"	11' 3"	14' 2"	12' 4"	10' 4"
		24	18' 6"	16' 2"	13' 7"	16' 9"	14' 8"	12' 4"	15' 7"	13' 7"	11' 6"	14' 8"	12' 9"	10' 9"	13' 10"	12' 2"	10' 3"	13' 3"	11' 8"	9' 9"	12' 4"	10' 9"	9' 1"
362S250-118	50	12	24' 7"	21' 6"	18' 1"	22' 4"	19' 6"	16' 6"	20' 9"	18' 1"	15' 3"	19' 6"	17' 1"	14' 4"	18' 7"	16' 2"	13' 8"	17' 8"	15' 6"	13' 1"	16' 6"	14' 4"	12' 1"
		16	22' 4"	19' 6"	16' 6"	20' 3"	17' 8"	15' 0"	18' 10"	16' 6"	13' 10"	17' 8"	15' 6"	13' 1"	16' 10"	14' 8"	12' 4"	16' 1"	14' 1"	11' 10"	15' 0"	13' 1"	11' 0"
		24	19' 6"	17' 1"	14' 4"	17' 8"	15' 6"	13' 1"	16' 6"	14' 4"	12' 1"	15' 6"	13' 6"	11' 4"	14' 8"	12' 10"	10' 10"	14' 1"	12' 3"	10' 4"	13' 1"	11' 4"	9' 7"
400S137-33	33	12	14' 10"	13' 7"	11' 6"	12' 10"	12' 3"	10' 4"	11' 6"	11' 6"	9' 8"	10' 6"	10' 6"	9' 1"	9' 8"e	9' 8"e	8' 7"	9' 1"e	9' 1"e	8' 3"e	8' 1"e	8' 1"e	7' 8"e
		16	12' 10"	12' 3"	10' 4"	11' 2"	11' 2"	9' 6"	10' 0"e	10' 0"e	8' 9"	9' 1"e	9' 1"e	8' 3"e	8' 4"e	8' 4"e	7' 10"e	7' 10"e	7' 10"e	7' 6"e	7' 1"e	7' 1"e	7' 0"e
		24	10' 6"	10' 6"	9' 1"	9' 1"e	9' 1"e	8' 3"e	8' 1"e	8' 1"e	7' 8"e	7' 4"e	7' 4"e	7' 2"e	6' 10"e	6' 10"e	6' 10"e	6' 4"e	6' 4"e	6' 4"e	5' 9"e	5' 9"e	5' 9"e
400S137-43	33	12	16' 10"	14' 9"	12' 6"	15' 3"	13' 4"	11' 3"	13' 8"	12' 6"	10' 6"	12' 6"	11' 8"	9' 10"	11' 7"	11' 1"	9' 4"	10' 9"	10' 8"	9' 0"	9' 8"	9' 8"	8' 3"
		16	15' 3"	13' 4"	11' 3"	13' 3"	12' 2"	10' 3"	11' 10"	11' 3"	9' 7"	10' 9"	10' 8"	9' 0"	10' 0"	10' 0"	8' 6"	9' 4"	9' 4"	8' 2"	8' 4"e	8' 4"e	7' 7"
		24	12' 6"	11' 8"	9' 10"	10' 9"	10' 8"	9' 0"	9' 8"	9' 8"	8' 3"	8' 9"	8' 9"	7' 10"	8' 2"e	8' 2"e	7' 6"	7' 8"e	7' 8"e	7' 1"e	6' 9"e	6' 9"e	6' 7"e
400-137-43	50	12	16' 10"	14' 9"	12' 6"	15' 4"	13' 4"	11' 3"	14' 3"	12' 6"	10' 6"	13' 4"	11' 8"	9' 10"	12' 9"	11' 1"	9' 4"	12' 2"	10' 8"	9' 0"	11' 1"	9' 10"	8' 3"
		16	15' 4"	13' 4"	11' 3"	14' 0"	12' 2"	10' 3"	13' 0"	11' 3"	9' 7"	12' 2"	10' 8"	9' 0"	11' 6"	10' 1"	8' 6"	10' 9"	9' 8"	8' 2"	9' 7"	9' 0"	7' 7"
		24	13' 4"	11' 8"	9' 10"	12' 2"	10' 8"	9' 0"	11' 1"	9' 10"	8' 3"	10' 2"	9' 3"	7' 10"	9' 4"	8' 9"	7' 6"	8' 9"	8' 6"	7' 1"	7' 10"	7' 10"	6' 7"
400S137-54	50	12	18' 1"	15' 9"	13' 4"	16' 6"	14' 4"	12' 1"	15' 3"	13' 4"	11' 3"	14' 4"	12' 7"	10' 7"	13' 8"	11' 10"	10' 1"	13' 1"	11' 4"	9' 7"	12' 1"	10' 7"	8' 10"
		16	16' 6"	14' 4"	12' 1"	15' 0"	13' 1"	11' 0"	13' 10"	12' 1"	10' 2"	13' 1"	11' 4"	9' 7"	12' 4"	10' 9"	9' 1"	11' 10"	10' 4"	8' 8"	11' 0"	9' 7"	8' 1"
		24	14' 4"	12' 7"	10' 7"	13' 1"	11' 4"	9' 7"	12' 1"	10' 7"	8' 10"	11' 4"	10' 0"	8' 4"	10' 9"	9' 6"	8' 0"	10' 2"	9' 1"	7' 7"	9' 1"	8' 4"	7' 1"
400S137-68	50	12	19' 4"	16' 10"	14' 3"	17' 7"	15' 4"	13' 0"	16' 3"	14' 3"	12' 0"	15' 4"	13' 4"	11' 3"	14' 7"	12' 9"	10' 9"	14' 0"	12' 2"	10' 3"	13' 0"	11' 3"	9' 7"
		16	17' 7"	15' 4"	13' 0"	16' 0"	14' 0"	11' 9"	14' 9"	13' 0"	10' 10"	14' 0"	12' 2"	10' 3"	13' 3"	11' 7"	9' 9"	12' 8"	11' 1"	9' 4"	11' 9"	10' 3"	8' 8"
		24	15' 4"	13' 4"	11' 3"	14' 0"	12' 2"	10' 3"	13' 0"	11' 3"	9' 7"	12' 2"	10' 8"	9' 0"	11' 7"	10' 1"	8' 6"	11' 1"	9' 8"	8' 2"	10' 3"	9' 0"	7' 7"
400S162-33	33	12	16' 1"	14' 2"	12' 0"	13' 10"	12' 10"	10' 10"	12' 4"	12' 0"	10' 1"	11' 4"e	11' 3"e	9' 6"	10' 6"e	10' 6"e	9' 0"	9' 9"e	9' 9"e	8' 8"e	8' 9"e	8' 9"e	8' 0"e
		16	13' 10"	12' 10"	10' 10"	12' 0"	11' 8"	9' 10"	10' 9"e	10' 9"e	9' 2"	9' 9"e	9' 9"e	8' 8"e	9' 1"e	9' 1"e	8' 2"e	8' 6"e	8' 6"e	7' 10"e	7' 7"e	7' 7"e	7' 3"e
		24	11' 4"e	11' 3"e	9' 6"	9' 9"e	9' 9"e	8' 8"e	8' 9"e	8' 9"e	8' 0"e	8' 0"e	8' 0"e	7' 7"e	7' 4"e	7' 4"e	7' 2"e	7' 0"e	7' 0"e	6' 10"e	6' 2"e	6' 2"e	6' 2"e
400S162-43	33	12	17' 8"	15' 6"	13' 1"	16' 1"	14' 1"	11' 10"	14' 9"	13' 1"	11' 0"	13' 6"	12' 3"	10' 4"	12' 6"	11' 8"	9' 9"	11' 8"	11' 2"	9' 4"	10' 4"	10' 4"	8' 8"
		16	16' 1"	14' 1"	11' 10"	14' 3"	12' 9"	10' 9"	12' 9"	11' 10"	10' 0"	11' 8"	11' 2"	9' 4"	10' 9"	10' 7"	8' 10"	10' 1"	10' 1"	8' 7"	9' 0"e	9' 0"e	7' 10"
		24	13' 6"	12' 3"	10' 4"	11' 8"	11' 2"	9' 4"	10' 4"	10' 4"	8' 8"	9' 6"e	9' 6"e	8' 2"	8' 9"e	8' 9"e	7' 9"	8' 2"e	8' 2"e	7' 6"e	7' 4"e	7' 4"e	6' 10"e
400S162-43	50	12	17' 8"	15' 6"	13' 1"	16' 1"	14' 1"	11' 10"	14' 10"	13' 1"	11' 0"	14' 1"	12' 3"	10' 4"	13' 4"	11' 8"	9' 9"	12' 9"	11' 2"	9' 4"	11' 10"	10' 4"	8' 8"
		16	16' 1"	14' 1"	11' 10"	14' 7"	12' 9"	10' 9"	13' 7"	11' 10"	10' 0"	12' 9"	11' 2"	9' 4"	12' 1"	10' 7"	8' 10"	11' 7"	10' 1"	8' 7"	10' 4"	9' 4"	7' 10"
		24	14' 1"	12' 3"	10' 4"	12' 9"	11' 2"	9' 4"	11' 10"	10' 4"	8' 8"	10' 10"	9' 9"	8' 2"	10' 1"	9' 3"	7' 9"	9' 6"	8' 10"	7' 6"	8' 6"e	8' 2"	6' 10"
400S162-54	50	12	19' 0"	16' 7"	14' 0"	17' 3"	15' 1"	12' 8"	16' 0"	14' 0"	11' 9"	15' 1"	13' 2"	11' 1"	14' 3"	12' 6"	10' 7"	13' 8"	12' 0"	10' 1"	12' 8"	11' 1"	9' 4"
		16	17' 3"	15' 1"	12' 8"	15' 8"	13' 8"	11' 7"	14' 7"	12' 8"	10' 8"	13' 8"	12' 0"	10' 1"	13' 0"	11' 4"	9' 7"	12' 4"	10' 10"	9' 2"	11' 7"	10' 1"	8' 6"
		24	15' 1"	13' 2"	11' 1"	13' 8"	12' 0"	10' 1"	12' 8"	11' 1"	9' 4"	12' 0"	10' 6"	8' 9"	11' 4"	9' 10"	8' 4"	10' 10"	9' 6"	8' 0"	9' 9"	8' 9"	7' 4"
400S162-68	50	12	20' 3"	17' 9"	15' 0"	18' 6"	16' 1"	13' 7"	17' 1"	15' 0"	12' 7"	16' 1"	14' 1"	11' 10"	15' 3"	13' 4"	11' 3"	14' 8"	12' 9"	10' 9"	13' 7"	11' 10"	10' 0"
		16	18' 6"	16' 1"	13' 7"	16' 9"	14' 8"	12' 4"	15' 7"	13' 7"	11' 6"	14' 8"	12' 9"	10' 9"	13' 10"	12' 2"	10' 3"	13' 3"	11' 7"	9' 9"	12' 4"	10' 9"	9' 1"
		24	16' 1"	14' 1"	11' 10"	14' 8"	12' 9"	10' 9"	13' 7"	11' 10"	10' 0"	12' 9"	11' 2"	9' 4"	12' 2"	10' 7"	9' 0"	11' 7"	10' 2"	8' 7"	10' 9"	9' 4"	8' 0"
400S162-97	50	12	22' 6"	19' 7"	16' 6"	20' 4"	17' 9"	15' 0"	18' 10"	16' 6"	14' 0"	17' 9"	15' 7"	13' 1"	16' 10"	14' 9"	12' 6"	16' 2"	14' 1"	11' 10"	15' 0"	13' 1"	11' 1"
		16	20' 4"	17' 9"	15' 0"	18' 6"	16' 2"	13' 8"	17' 2"	15' 0"	12' 8"	16' 2"	14' 1"	11' 10"	15' 4"	13' 4"	11' 3"	14' 8"	12' 10"	10' 9"	13' 8"	11' 10"	10' 1"
		24	17' 9"	15' 7"	13' 1"	16' 2"	14' 1"	11' 10"	15' 0"	13' 1"	11' 1"	14' 1"	12' 4"	10' 4"	13' 4"	11' 8"	9' 10"	12' 10"	11' 2"	9' 6"	11' 10"	10' 4"	8' 9"
400S162-118	50	12	23' 7"	20' 8"	17' 4"	21' 6"	18' 9"	15' 9"	19' 10"	17' 4"	14' 8"	18' 9"	16' 4"	13' 9"	17' 9"	15' 7"	13' 1"	17' 1"	14' 10"	12' 7"	15' 9"	13' 9"	11' 8"
		16	21' 6"	18' 9"	15' 9"	19' 6"	17' 1"	14' 4"	18' 1"	15' 9"	13' 4"	17' 1"	14' 10"	12' 7"	16' 2"	14' 2"	11' 10"	15' 6"	13' 6"	11' 4"	14' 4"	12' 7"	10' 7"
		24	18' 9"	16' 4"	13' 9"	17' 1"	14' 10"	12' 7"	15' 9"	13' 9"	11' 8"	14' 10"	13' 0"	11' 0"	14' 2"	12' 4"	10' 4"	13' 6"	11' 9"	10' 0"	12' 7"	11' 0"	9' 3"
400S200-33	33	12	17' 0"	15' 0"	12' 7"	14' 8"	13' 7"	11' 6"	13' 2"e	12' 7"	10' 8"	12' 0"e	11' 10"e	10' 0"	11' 1"e	11' 1"e	9' 6"e	10' 4"e	10' 4"e	9' 1"e	9' 3"e	9' 3"e	8' 6"e
		16	14' 8"	13' 7"	11' 6"	12' 8"e	12' 4"e	10' 4"	11' 4"e	11' 4"e	9' 8"	10' 4"e	10' 4"e	9' 1"e	9' 7"e	9' 7"e	8' 8"e	9' 0"e	9' 0"e	8' 3"e	8' 1"e	8' 1"e	7' 8"e
		24	12' 0"e	11' 10"e	10' 0"	10' 4"e	10' 4"e	9' 1"e	9' 3"e	9' 3"e	8' 6"e	8' 6"e	8' 6"e	8' 0"e	7' 10"e	7' 10"e	7' 7"e	7' 4"e	7' 4"e	7' 2"e	6' 7"e	6' 7"e	6' 7"e
400S200-43	33	12	18' 8"	16' 3"	13' 9"	17' 0"	14' 9"	12' 6"	15' 9"	13' 9"	11' 7"	14' 4"	13' 0"	10' 10"	13' 4"	12' 3"	10' 4"	12' 6"	11' 9"	9' 10"	11' 2"e	10' 10"	9' 2"
		16	17' 0"	14' 9"	12' 6"	15' 3"	13' 6"	11' 4"	13' 8"	12' 6"	10' 7"	12' 6"	11' 9"	9' 10"	11' 7"	11' 2"	9' 4"	10' 9"e	10' 8"e	9' 0"	9' 8"e	9' 8"e	8' 4"e
		24	14' 4"	13' 0"	10' 10"	12' 6"	11' 9"	9' 10"	11' 2"e	10' 10"	9' 2"	10' 2"e	10' 2"e	8' 8"	9' 6"e	9' 6"e	8' 2"e	8' 9"e	8' 9"e	7' 10"e	7' 10"e	7' 10"e	7' 3"e
400S200-43	50	12	18' 8"	16' 3"	13' 9"	17' 0"	14' 9"	12' 6"	15' 9"	13' 9"	11' 7"	14' 9"	13' 0"	10' 10"	14' 1"	12' 3"	10' 4"	13' 6"	11' 9"	9' 10"	12' 6"	10' 10"	9' 2"
		16	17' 0"	14' 9"	12' 6"	15' 4"	13' 6"	11' 4"	14' 3"	12' 6"	10' 7"	13' 6"	11' 9"	9' 10"	12' 9"	11' 2"	9' 4"	12' 3"	10' 8"	9' 0"	11' 1"	9' 10"	8' 4"
		24	14' 9"	13' 0"	10' 10"	13' 6"	11' 9"	9' 10"	12' 6"	10' 10"	9' 2"	11' 8"	10' 3"	8' 8"	10' 10"	9' 9"	8' 2"	10' 2"	9' 4"	7' 10"	9' 1"e	8' 8"e	7' 3"
400S200-54	50	12	20' 1"	17' 6"	14' 9"	18' 2"	15' 10"	13' 4"	16' 10"	14' 9"	12' 6"	15' 10"	13' 10"	11' 8"	15' 1"	13' 2"	11' 1"	14' 6"	12' 7"	10' 8"	13' 4"	11' 8"	9' 10"
		16	18' 2"	15' 10"	13' 4"	16' 7"	14' 6"	12' 2"	15' 4"	13' 4"	11' 3"	14' 6"	12' 7"	10' 8"	13' 8"	12' 0"	10' 1"	13' 1"	11' 6"	9' 8"	12' 2"	10' 8"	9' 0"
		24	15' 10"	13' 10"	11' 8"	14' 6"	12' 7"	10' 8"	13' 4"	11' 8"	9' 10"	12' 7"	11' 0"	9' 3"	12' 0"	10' 6"	8' 9"	11' 6"	10' 0"	8' 6"	10' 6"	9' 3"	7' 10"
400S200-68	50	12	21' 6"	18' 9"	15' 9"	19' 6"	17' 1"	14' 4"	18' 1"	15' 9"	13' 4"	17' 1"	14' 10"	12' 7"	16' 2"	14' 2"	11' 10"	15' 6"	13' 6"	11' 4"	14' 4"	12' 7"	10' 7"
		16	19' 6"	17' 1"	14' 4"	17' 8"	15' 6"	13' 1"	16' 6"	14' 4"	12' 1"	15' 6"	13' 6"	11' 4"	14' 8"	12' 10"	10' 9"	14' 1"	12' 3"	10' 4"	13' 1"	11' 4"	9' 7"
		24	17' 1"	14' 10"	12' 7"	15' 6"	13' 6"	11' 4"	14' 4"	12' 7"	10' 7"	13' 6"	11' 9"	10' 0"	12' 10"	11' 2"	9' 6"	12' 3"	10' 8"	9' 1"	11' 4"	10' 0"	8' 4"
400S200-97	50	12	23' 9"	20' 9"	17' 6"	21' 7"	18' 10"	15' 10"	20' 1"	17' 6"	14' 9"	18' 10"	16' 6"	13' 10"	17' 10"	15' 8"	13' 2"	17' 2"	15' 0"	12' 7"	15' 10"	13' 10"	11' 8"
		16	21' 7"	18' 10"	15' 10"	19' 7"	17' 2"	14' 6"	18' 2"	15' 10"	13' 4"	17' 2"	15' 0"	12' 7"	16' 3"	14' 2"	12' 0"	15' 7"	13' 7"	11' 6"	14' 6"	12' 7"	10' 8"
		24	18' 10"	16' 6"	13' 10"	17' 2"	15' 0"	12' 7"	15' 10"	13' 10"	11' 8"	15' 0"	13' 1"	11' 0"	14' 2"	12' 4"	10' 6"	13' 7"	11' 10"	10' 0"	12' 7"	11' 0"	9' 3"
400S200-118	50	12	25' 1"	21' 10"	18' 6"	22' 9"	19' 10"	16' 9"	21' 2"	18' 6"	15' 7"	19' 10"	17' 4"	14' 8"	18' 10"	16' 6"	13' 10"	18' 1"	15' 9"	13' 3"	16' 9"	14' 8"	12' 4"
		16	22' 9"	19' 10"	16' 9"	20' 8"	18' 1"	15' 3"	19' 2"	16' 9"	14' 2"	18' 1"	15' 9"	13' 3"	17' 2"	15' 0"	12' 8"	16' 4"	14' 4"	12' 1"	15' 3"	13' 3"	11' 2"
		24	19' 10"	17' 4"	14' 8"	18' 1"	15' 9"	13' 3"	16' 9"	14' 8"	12' 4"	15' 9"	13' 9"	11' 7"	15' 0"	13' 1"	11' 1"	14' 4"	12' 6"	10' 7"	13' 3"	11' 7"	9' 9"

NOTE: See page 18 for Table Notes.

CURTAINWALL LIMITING HEIGHTS - SINGLE SPAN

MEMBER	F_y (ksi)	SPACING (in.) o.c.	15 psf			20 psf			25 psf			30 psf			35 psf			40 psf			50 psf		
			L/240	L/360	L/600	L/240	L/360	L/600	L/240	L/360	L/600	L/240	L/360	L/600	L/240	L/360	L/600	L/240	L/360	L/600	L/240	L/360	L/600
400S250-33	33	12	17' 7"	15' 7"	13' 2"	15' 2"	14' 2"	12' 0"	13' 7"e	13' 2"e	11' 1"	12' 4"e	12' 4"e	10' 4"	11' 6"e	11' 6"e	9' 10"e	10' 9"e	10' 9"e	9' 6"e	9' 7"e	9' 7"e	8' 9"e
		16	15' 2"	14' 2"	12' 0"	13' 2"e	12' 10"e	10' 10"	11' 9"e	11' 9"e	10' 1"e	10' 9"e	10' 9"e	9' 6"e	10' 0"e	10' 0"e	9' 0"e	9' 3"e	9' 3"e	8' 7"e	8' 3"e	8' 3"e	8' 0"e
		24	12' 4"e	12' 4"e	10' 4"	10' 9"e	10' 9"e	9' 6"e	9' 7"e	9' 7"e	8' 9"e	8' 9"e	8' 9"e	8' 3"e	8' 1"e	8' 1"e	7' 10"e	7' 7"e	7' 7"e	7' 6"e	6' 9"e	6' 9"e	6' 9"e
400S250-43	33	12	19' 8"	17' 2"	14' 6"	17' 10"	15' 7"	13' 2"	16' 3"	14' 6"	12' 2"	14' 10"	13' 8"	11' 6"	13' 9"	13' 0"	10' 10"	12' 10"	12' 4"	10' 6"	11' 6"e	11' 6"e	9' 8"
		16	17' 10"	15' 7"	13' 2"	15' 9"	14' 2"	12' 0"	14' 1"	13' 2"	11' 1"	12' 10"	12' 4"	10' 6"	11' 10"e	11' 9"e	9' 10"	11' 1"e	11' 1"e	9' 6"	10' 0"e	10' 0"e	8' 9"e
		24	14' 10"	13' 8"	11' 6"	12' 10"	12' 4"	10' 6"	11' 6"e	11' 6"e	9' 8"	10' 6"e	10' 6"e	9' 1"e	9' 8"e	9' 8"e	8' 8"e	9' 1"e	9' 1"e	8' 3"e	8' 1"e	8' 1"e	7' 8"e
400S250-43	50	12	19' 6"	17' 0"	14' 3"	17' 8"	15' 4"	13' 0"	16' 4"	14' 3"	12' 1"	15' 4"	13' 6"	11' 4"	14' 8"	12' 9"	10' 9"	14' 0"	12' 3"	10' 3"	13' 0"	11' 4"	9' 7"
		16	17' 8"	15' 4"	13' 0"	16' 1"	14' 0"	11' 9"	14' 10"	13' 0"	11' 0"	14' 0"	12' 3"	10' 3"	13' 3"	11' 7"	9' 9"	12' 8"	11' 1"	9' 4"	11' 4"	10' 3"	8' 8"
		24	15' 4"	13' 6"	11' 4"	14' 0"	12' 3"	10' 3"	13' 0"	11' 4"	9' 7"	12' 0"	10' 8"	9' 0"	11' 2"	10' 2"	8' 7"	10' 4"e	9' 8"	8' 2"	9' 3"e	9' 0"e	7' 7"
400S250-54	50	12	21' 1"	18' 4"	15' 6"	19' 1"	16' 8"	14' 1"	17' 9"	15' 6"	13' 1"	16' 8"	14' 7"	12' 3"	15' 10"	13' 10"	11' 8"	15' 2"	13' 3"	11' 2"	14' 1"	12' 3"	10' 4"
		16	19' 1"	16' 8"	14' 1"	17' 4"	15' 2"	12' 9"	16' 1"	14' 1"	11' 10"	15' 2"	13' 3"	11' 2"	14' 4"	12' 7"	10' 7"	13' 9"	12' 1"	10' 2"	12' 9"	11' 2"	9' 4"
		24	16' 8"	14' 7"	12' 3"	15' 2"	13' 3"	11' 2"	14' 1"	12' 3"	10' 4"	13' 3"	11' 7"	9' 9"	12' 7"	11' 0"	9' 3"	12' 0"	10' 6"	8' 10"	10' 8"	9' 9"	8' 2"
400S250-68	50	12	22' 8"	19' 9"	16' 8"	20' 7"	18' 0"	15' 2"	19' 1"	16' 8"	14' 1"	18' 0"	15' 8"	13' 3"	17' 1"	14' 10"	12' 7"	16' 3"	14' 3"	12' 0"	15' 2"	13' 3"	11' 2"
		16	20' 7"	18' 0"	15' 2"	18' 8"	16' 3"	13' 9"	17' 4"	15' 2"	12' 9"	16' 3"	14' 3"	12' 0"	15' 6"	13' 7"	11' 4"	14' 9"	13' 0"	10' 10"	13' 9"	12' 0"	10' 2"
		24	18' 0"	15' 8"	13' 3"	16' 3"	14' 3"	12' 0"	15' 2"	13' 3"	11' 2"	14' 3"	12' 6"	10' 6"	13' 7"	11' 9"	10' 0"	13' 0"	11' 3"	9' 7"	12' 0"	10' 6"	8' 10"
400S250-97	50	12	25' 1"	22' 0"	18' 6"	22' 9"	19' 10"	16' 9"	21' 2"	18' 6"	15' 7"	19' 10"	17' 4"	14' 8"	18' 10"	16' 7"	14' 0"	18' 1"	15' 9"	13' 4"	16' 9"	14' 8"	12' 4"
		16	22' 9"	19' 10"	16' 9"	20' 8"	18' 1"	15' 3"	19' 3"	16' 9"	14' 2"	18' 1"	15' 9"	13' 4"	17' 2"	15' 0"	12' 8"	16' 6"	14' 4"	12' 1"	15' 3"	13' 4"	11' 3"
		24	19' 10"	17' 4"	14' 8"	18' 1"	15' 9"	13' 4"	16' 9"	14' 8"	12' 4"	15' 9"	13' 9"	11' 8"	15' 0"	13' 1"	11' 1"	14' 4"	12' 7"	10' 7"	13' 4"	11' 8"	9' 9"
400S250-118	50	12	26' 7"	23' 2"	19' 7"	24' 1"	21' 1"	17' 9"	22' 4"	19' 7"	16' 6"	21' 1"	18' 4"	15' 6"	20' 0"	17' 6"	14' 9"	19' 1"	16' 8"	14' 1"	17' 9"	15' 6"	13' 1"
		16	24' 1"	21' 1"	17' 9"	21' 10"	19' 1"	16' 2"	20' 3"	17' 9"	15' 0"	19' 1"	16' 8"	14' 1"	18' 2"	15' 10"	13' 4"	17' 4"	15' 2"	12' 9"	16' 2"	14' 1"	11' 10"
		24	21' 1"	18' 4"	15' 6"	19' 1"	16' 8"	14' 1"	17' 9"	15' 6"	13' 1"	16' 8"	14' 7"	12' 3"	15' 10"	13' 10"	11' 8"	15' 2"	13' 3"	11' 2"	14' 1"	12' 3"	10' 4"
600S137-33	33	12	18' 7"	18' 7"	15' 8"	16' 1"e	16' 1"e	14' 3"	14' 4"e	14' 4"e	13' 2"e	13' 1"e	13' 1"e	12' 6"e	12' 2"e	12' 2"e	11' 9"e	11' 4"e	11' 4"e	11' 3"e	10' 2"e	10' 2"e	10' 2"e
		16	16' 1"e	16' 1"e	14' 3"	13' 10"e	13' 10"e	13' 0"e	12' 6"e	12' 6"e	12' 0"e	11' 4"e	11' 4"e	11' 3"e	10' 6"e	10' 6"e	10' 6"e	9' 10"e	9' 10"e	9' 10"e	8' 9"e	8' 9"e	8' 9"e
		24	13' 1"e	13' 1"e	12' 6"e	11' 4"e	11' 4"e	11' 3"e	10' 2"e	10' 2"e	10' 2"e	9' 3"e	9' 3"e	9' 3"e	8' 7"e	8' 7"e	8' 7"e	8' 0"e	8' 0"e	8' 0"e	7' 2"e	7' 2"e	7' 2"e
600S137-43	33	12	22' 3"	20' 4"	17' 2"	19' 3"	18' 6"	15' 7"	17' 3"	17' 2"	14' 6"	15' 9"	15' 9"	13' 8"	14' 7"	14' 7"	13' 0"	13' 7"e	13' 7"e	12' 4"	12' 2"e	12' 2"e	11' 6"e
		16	19' 3"	18' 6"	15' 7"	16' 8"	16' 8"	14' 2"	14' 10"	14' 10"	13' 2"	13' 7"e	13' 7"e	12' 4"	12' 7"e	12' 7"e	11' 9"e	11' 9"e	11' 9"e	11' 3"e	10' 7"e	10' 7"e	10' 6"e
		24	15' 9"	15' 9"	13' 8"	13' 7"e	13' 7"e	12' 4"	12' 2"e	12' 2"e	11' 6"e	11' 1"e	11' 1"e	10' 9"e	10' 3"e	10' 3"e	10' 3"e	9' 7"e	9' 7"e	9' 7"e	8' 7"e	8' 7"e	8' 7"e
600S137-43	50	12	23' 2"	20' 3"	17' 1"	21' 1"	18' 6"	15' 7"	19' 7"	17' 1"	14' 4"	18' 0"	16' 1"	13' 7"	16' 8"	15' 3"	12' 10"	15' 7"	14' 7"	12' 4"	13' 10"	13' 7"	11' 6"
		16	21' 1"	18' 6"	15' 7"	19' 1"	16' 9"	14' 1"	17' 1"	15' 7"	13' 1"	15' 7"	14' 7"	12' 4"	14' 4"	13' 10"	11' 8"	13' 6"	13' 3"	11' 2"	12' 1"e	12' 1"e	10' 4"
		24	18' 0"	16' 1"	13' 7"	15' 7"	14' 7"	12' 4"	13' 10"	13' 7"	11' 6"	12' 8"	12' 8"	10' 9"	11' 9"e	11' 9"e	10' 3"	11' 0"e	11' 0"e	9' 9"	9' 10"e	9' 10"e	9' 1"e
600S137-54	50	12	25' 0"	21' 10"	18' 6"	22' 9"	19' 10"	16' 9"	21' 1"	18' 6"	15' 7"	19' 10"	17' 4"	14' 7"	18' 10"	16' 6"	13' 10"	18' 1"	15' 9"	13' 3"	16' 3"	14' 7"	12' 4"
		16	22' 9"	19' 10"	16' 9"	20' 8"	18' 1"	15' 2"	19' 2"	16' 9"	14' 1"	18' 1"	15' 9"	13' 3"	16' 9"	15' 0"	12' 7"	15' 9"	14' 3"	12' 1"	14' 1"	13' 3"	11' 2"
		24	19' 10"	17' 4"	14' 7"	18' 1"	15' 9"	13' 3"	16' 3"	14' 7"	12' 4"	14' 10"	13' 9"	11' 7"	13' 9"	13' 1"	11' 0"	12' 10"	12' 6"	10' 7"	11' 6"	11' 6"	9' 9"
600S137-68	50	12	26' 9"	23' 4"	19' 9"	24' 4"	21' 3"	18' 0"	22' 7"	19' 9"	16' 8"	21' 3"	18' 7"	15' 8"	20' 2"	17' 8"	14' 10"	19' 3"	16' 10"	14' 3"	18' 0"	15' 8"	13' 2"
		16	24' 4"	21' 3"	18' 0"	22' 1"	19' 3"	16' 3"	20' 7"	18' 0"	15' 2"	19' 3"	16' 10"	14' 3"	18' 4"	16' 1"	13' 6"	17' 7"	15' 4"	13' 0"	16' 3"	14' 3"	12' 0"
		24	21' 3"	18' 7"	15' 8"	19' 3"	16' 10"	14' 3"	18' 0"	15' 8"	13' 2"	16' 10"	14' 9"	12' 6"	16' 0"	14' 0"	11' 9"	15' 0"	13' 4"	11' 3"	13' 4"	12' 6"	10' 6"
600S137-97	50	12	29' 8"	25' 10"	21' 10"	27' 0"	23' 7"	19' 10"	25' 0"	21' 10"	18' 4"	23' 7"	20' 7"	17' 4"	22' 4"	19' 6"	16' 6"	21' 4"	18' 8"	15' 9"	19' 10"	17' 4"	14' 7"
		16	27' 0"	23' 7"	19' 10"	24' 6"	21' 4"	18' 1"	22' 8"	19' 10"	16' 9"	21' 4"	18' 8"	15' 9"	20' 3"	17' 9"	15' 0"	19' 4"	17' 0"	14' 3"	18' 1"	15' 9"	13' 3"
		24	23' 7"	20' 7"	17' 4"	21' 4"	18' 8"	15' 9"	19' 10"	17' 4"	14' 7"	18' 8"	16' 3"	13' 9"	17' 9"	15' 6"	13' 1"	17' 0"	14' 9"	12' 6"	15' 9"	13' 9"	11' 7"
600S162-33	33	12	20' 1"	19' 6"	16' 6"	17' 4"e	17' 4"e	15' 0"	15' 7"e	15' 7"e	13' 10"e	14' 2"e	14' 2"e	13' 1"e	13' 2"e	13' 2"e	12' 4"e	12' 3"e	12' 3"e	11' 10"e	11' 0"e	11' 0"e	11' 0"e
		16	17' 4"e	17' 4"e	15' 0"	15' 1"e	15' 1"e	13' 7"e	13' 6"e	13' 6"e	12' 7"e	12' 3"e	12' 3"e	11' 10"e	11' 4"e	11' 4"e	11' 3"e	10' 8"e	10' 8"e	10' 8"e	9' 6"e	9' 6"e	9' 6"e
		24	14' 2"e	14' 2"e	13' 1"e	12' 3"e	12' 3"e	11' 10"e	11' 0"e	11' 0"e	11' 0"e	10' 0"e	10' 0"e	10' 0"e	9' 3"e	9' 3"e	9' 3"e	8' 8"e	8' 8"e	8' 8"e	7' 9"e	7' 9"e	7' 9"e
600S162-43	33	12	24' 0"	21' 3"	17' 10"	20' 9"	19' 3"	16' 3"	18' 7"	17' 10"	15' 1"	17' 0"	16' 10"	14' 2"	15' 8"e	15' 8"e	13' 6"	14' 8"e	14' 8"e	12' 10"	13' 2"e	13' 2"e	12' 0"e
		16	20' 9"	19' 3"	16' 3"	18' 0"	17' 7"	14' 9"	16' 1"e	16' 1"e	13' 9"	14' 8"e	14' 8"e	12' 10"	13' 7"e	13' 7"e	12' 3"e	12' 8"e	12' 8"e	11' 9"e	11' 4"e	11' 4"e	10' 10"e
		24	17' 0"	16' 10"	14' 2"	14' 8"e	14' 8"e	12' 10"	13' 2"e	13' 2"e	12' 0"e	12' 0"e	12' 0"e	11' 3"e	11' 1"e	11' 1"e	10' 8"e	10' 4"e	10' 4"e	10' 3"e	9' 3"e	9' 3"e	9' 3"e
600S162-43	50	12	24' 4"	21' 3"	17' 10"	22' 1"	19' 3"	16' 3"	20' 6"	17' 10"	15' 1"	19' 3"	16' 10"	14' 2"	18' 0"	16' 0"	13' 6"	16' 9"	15' 3"	12' 10"	15' 0"	14' 2"	12' 0"
		16	22' 1"	19' 3"	16' 3"	20' 1"	17' 7"	14' 9"	18' 4"	16' 3"	13' 9"	16' 9"	15' 3"	12' 10"	15' 7"	14' 7"	12' 3"	14' 7"	13' 10"	11' 9"	13' 0"e	12' 10"e	10' 10"
		24	19' 3"	16' 10"	14' 2"	16' 9"	15' 3"	12' 10"	15' 0"	14' 2"	12' 0"	13' 8"e	13' 4"e	11' 3"	12' 8"e	12' 8"e	10' 8"	11' 10"e	11' 10"e	10' 3"e	10' 7"e	10' 7"e	9' 6"e
600S162-54	50	12	26' 1"	22' 9"	19' 3"	23' 8"	20' 8"	17' 6"	22' 0"	19' 3"	16' 2"	20' 8"	18' 1"	15' 3"	19' 8"	17' 2"	14' 6"	18' 9"	16' 6"	13' 10"	17' 6"	15' 3"	12' 10"
		16	23' 8"	20' 8"	17' 6"	21' 7"	18' 9"	15' 10"	20' 0"	17' 6"	14' 9"	18' 9"	16' 6"	13' 10"	17' 10"	15' 7"	13' 2"	17' 0"	15' 0"	12' 7"	15' 2"	13' 10"	11' 8"
		24	20' 8"	18' 1"	15' 3"	18' 9"	16' 6"	13' 10"	17' 6"	15' 3"	12' 10"	16' 0"	14' 4"	12' 1"	14' 9"	13' 8"	11' 6"	13' 10"	13' 1"	11' 0"	12' 4"e	12' 1"e	10' 2"
600S162-68	50	12	28' 0"	24' 6"	20' 7"	25' 6"	22' 2"	18' 9"	23' 7"	20' 7"	17' 4"	22' 2"	19' 4"	16' 4"	21' 1"	18' 6"	15' 7"	20' 2"	17' 8"	14' 10"	18' 9"	16' 4"	13' 9"
		16	25' 6"	22' 2"	18' 9"	23' 1"	20' 2"	17' 0"	21' 6"	18' 9"	15' 9"	20' 2"	17' 8"	14' 10"	19' 2"	16' 9"	14' 1"	18' 4"	16' 0"	13' 6"	17' 0"	14' 10"	12' 7"
		24	22' 2"	19' 4"	16' 4"	20' 2"	17' 8"	14' 10"	18' 9"	16' 4"	13' 9"	17' 8"	15' 4"	13' 0"	16' 9"	14' 7"	12' 4"	16' 0"	14' 0"	11' 9"	14' 4"	13' 0"	11' 0"
600S162-97	50	12	31' 1"	27' 1"	22' 10"	28' 2"	24' 7"	20' 9"	26' 2"	22' 10"	19' 3"	24' 7"	21' 6"	18' 2"	23' 4"	20' 6"	17' 3"	22' 4"	19' 7"	16' 6"	20' 9"	18' 2"	15' 3"
		16	28' 2"	24' 7"	20' 9"	25' 7"	22' 4"	18' 10"	23' 9"	20' 9"	17' 6"	22' 4"	19' 7"	16' 6"	21' 3"	18' 7"	15' 8"	20' 3"	17' 9"	15' 0"	18' 10"	16' 6"	13' 10"
		24	24' 7"	21' 6"	18' 2"	22' 4"	19' 7"	16' 6"	20' 9"	18' 2"	15' 3"	19' 7"	17' 1"	14' 4"	18' 7"	16' 2"	13' 8"	17' 9"	15' 6"	13' 1"	16' 6"	14' 4"	12' 2"
600S162-118	50	12	32' 9"	28' 8"	24' 2"	29' 9"	26' 0"	22' 0"	27' 8"	24' 2"	20' 4"	26' 0"	22' 8"	19' 2"	24' 8"	21' 7"	18' 2"	23' 8"	20' 8"	17' 4"	22' 0"	19' 2"	16' 2"
		16	29' 9"	26' 0"	22' 0"	27' 1"	23' 8"	20' 0"	25' 1"	22' 0"	18' 6"	23' 8"	20' 8"	17' 4"	22' 6"	19' 7"	16' 7"	21' 6"	18' 9"	15' 9"	20' 0"	17' 4"	14' 8"
		24	26' 0"	22' 8"	19' 2"	23' 8"	20' 8"	17' 4"	22' 0"	19' 2"	16' 2"	20' 8"	18' 1"	15' 2"	19' 7"	17' 1"	14' 6"	18' 9"	16' 4"	13' 9"	17' 4"	15' 2"	12' 9"
600S200-33	33	12	21' 6"e	20' 6"e	17' 3"	18' 7"e	18' 7"e	15' 8"e	16' 8"e	16' 8"e	14' 7"e	15' 2"e	15' 2"e	13' 8"e	14' 1"e	14' 1"e	13' 0"e	13' 2"e	13' 2"e	12' 6"e	11' 9"e	11' 9"e	11' 7"e
		16	18' 7"e	18' 7"e	15' 8"e	16' 1"e	16' 1"e	14' 3"e	14' 4"e	14' 4"e	13' 3"e	13' 2"e	13' 2"e	12' 6"e	12' 2"e	12' 2"e	11' 9"e	11' 4"e	11' 4"e	11' 3"e	10' 2"e	10' 2"e	10' 2"e
		24	15' 2"e	15' 2"e	13' 8"e	13' 2"e	13' 2"e	12' 6"e	11' 9"e	11' 9"e	11' 7"e	10' 9"e	10' 9"e	10' 9"e	10' 0"e	10' 0"e	10' 0"e	9' 3"e	9' 3"e	9' 3"e	8' 3"e	8' 3"e	8' 3"e
600S200-43	33	12	25' 7"	22' 4"	18' 10"	22' 3"	20' 3"	17' 1"	19' 10"	18' 10"	15' 10"	18' 2"e	17' 8"e	15' 0"	16' 9"e	16' 9"e	14' 2"	15' 8"e	15' 8"e	13' 7"e	14' 1"e	14' 1"e	12' 7"e
		16	22' 3"	20' 3"	17' 1"	19' 3"	18' 6"	15' 7"	17' 2"e	17' 1"e	14' 4"	15' 8"e	15' 8"e	13' 7"e	14' 7"e	14' 7"e	12' 10"e	13' 7"e	13' 7"e	12' 4"e	12' 2"e	12' 2"e	11' 6"e
		24	18' 2"e	17' 8"e	15' 0"	15' 8"e	15' 8"e	13' 7"e	14' 1"e	14' 1"e	12' 7"e	12' 10"e	12' 10"e	11' 10"e	11' 10"e	11' 10"e	11' 3"e	11' 1"e	11' 1"e	10' 9"e	10' 0"e	10' 0"e	10' 0"e
600S200-43	50	12	25' 7"	22' 4"	18' 10"	23' 2"	20' 3"	17' 1"	21' 7"	18' 10"	15' 10"	20' 3"	17' 8"	15' 0"	19' 2"	16' 10"	14' 2"	18' 0"	16' 1"	13' 7"	16' 1"e	15' 0"	12' 7"
		16	23' 2"	20' 3"	17' 1"	21' 1"	18' 6"	15' 7"	19' 7"	17' 1"	14' 4"	18' 0"	16' 1"	13' 7"	16' 8"	15' 3"	12' 10"	15' 7"e	14' 7"	12' 4"	13' 10"e	13' 7"e	11' 6"
		24	20' 3"	17' 8"	15' 0"	18' 0"	16' 1"	13' 7"	16' 1"e	15' 0"	12' 7"	14' 8"e	14' 1"e	11' 10"	13' 7"e	13' 4"e	11' 3"e	12' 8"e	12' 8"e	10' 9"e	11' 4"e	11' 4"e	10' 0"e
600S200-54	50	12	27' 6"	24' 0"	20' 2"	25' 0"	21' 9"	18' 4"	23' 2"	20' 2"	17' 1"	21' 9"	19' 0"	16' 1"	20' 8"	18' 1"	15' 3"	19' 9"	17' 3"	14' 7"	18' 4"	16' 1"	13' 6"
		16	25' 0"	21' 9"	18' 4"	22' 8"	19' 9"	16' 8"	21' 0"	18' 4"	15' 6"	19' 9"	17' 3"	14' 7"	18' 9"	16' 4"	13' 10"	18' 0"	15' 8"	13' 3"	16' 2"	14' 7"	12' 3"
		24	21' 9"	19' 0"	16' 1"	19' 9"	17' 3"	14' 7"	18' 4"	16' 1"	13' 6"	17' 1"	15' 1"	12' 8"	15' 9"	14' 4"	12' 1"	14' 9"	13' 8"	11' 7"	13' 2"e	12' 8"e	10' 9"
600S200-68	50	12	29' 6"	25' 8"	21' 8"	26' 9"	23' 4"	19' 8"	24' 10"	21' 8"	18' 3"	23' 4"	20' 4"	17' 2"	22' 2"	19' 4"	16' 4"	21' 3"	18' 7"	15' 8"	19' 8"	17' 2"	14' 6"
		16	26' 9"	23' 4"	19' 8"	24' 3"	21' 3"	17' 10"	22' 7"	19' 8"	16' 7"	21' 3"	18' 7"	15' 8"	20' 2"	17' 7"	14' 10"	19' 3"	16' 10"	14' 2"	17' 10"	15' 8"	13' 2"
		24	23' 4"	20' 4"	17' 2"	21' 3"	18' 7"	15' 8"	19' 8"	17' 2"	14' 6"	18' 7"	16' 2"	13' 8"	17' 7"	15' 4"	13' 0"	16' 10"	14' 8"	12' 4"	15' 4"	13' 8"	11' 6"

NOTE: See page 18 for Table Notes.

For more information, please contact Marino\WARE® Technical Services at 866.545.1545
This technical information reflects the most current information available and supersedes any and all
previous publications effective February 17, 2023 | MW-Cold Formed Catalog | © WARE Industries, Inc., 2023

CURTAINWALL LIMITING HEIGHTS - SINGLE SPAN

MEMBER	F_y (ksi)	SPACING (in.) o.c.	15 psf			20 psf			25 psf			30 psf			35 psf			40 psf			50 psf		
			L/240	L/360	L/600	L/240	L/360	L/600	L/240	L/360	L/600	L/240	L/360	L/600	L/240	L/360	L/600	L/240	L/360	L/600	L/240	L/360	L/600
600S200-97	50	12	32' 8"	28' 7"	24' 1"	29' 8"	26' 0"	21' 10"	27' 7"	24' 1"	20' 3"	26' 0"	22' 8"	19' 1"	24' 8"	21' 7"	18' 2"	23' 7"	20' 7"	17' 4"	21' 10"	19' 1"	16' 1"
		16	29' 8"	26' 0"	21' 10"	27' 0"	23' 7"	19' 10"	25' 1"	21' 10"	18' 6"	23' 7"	20' 7"	17' 4"	22' 4"	19' 7"	16' 6"	21' 4"	18' 8"	15' 9"	19' 10"	17' 4"	14' 8"
		24	26' 0"	22' 8"	19' 1"	23' 7"	20' 7"	17' 4"	21' 10"	19' 1"	16' 1"	20' 7"	18' 0"	15' 2"	19' 7"	17' 1"	14' 4"	18' 8"	16' 4"	13' 9"	17' 4"	15' 2"	12' 9"
600S200-118	50	12	34' 7"	30' 2"	25' 6"	31' 4"	27' 6"	23' 2"	29' 2"	25' 6"	21' 6"	27' 6"	24' 0"	20' 2"	26' 1"	22' 9"	19' 2"	25' 0"	21' 9"	18' 4"	23' 2"	20' 2"	17' 1"
		16	31' 4"	27' 6"	23' 2"	28' 7"	25' 0"	21' 1"	26' 6"	23' 2"	19' 6"	25' 0"	21' 9"	18' 4"	23' 8"	20' 8"	17' 6"	22' 8"	19' 9"	16' 8"	21' 1"	18' 4"	15' 6"
		24	27' 6"	24' 0"	20' 2"	25' 0"	21' 9"	18' 4"	23' 2"	20' 2"	17' 1"	21' 9"	19' 0"	16' 1"	20' 8"	18' 1"	15' 3"	19' 9"	17' 3"	14' 7"	18' 4"	16' 1"	13' 7"
600S250-43	33	12	26' 4"	23' 4"	19' 8"	22' 10"	21' 3"	17' 10"	20' 4"	19' 8"	16' 8"	18' 8"e	18' 7"e	15' 8"	17' 3"e	17' 3"e	14' 10"e	16' 2"e	16' 2"e	14' 2"e	14' 6"e	14' 6"e	13' 2"e
		16	22' 10"	21' 3"	17' 10"	19' 9"e	19' 3"	16' 3"	17' 8"e	17' 8"e	15' 1"	16' 2"e	16' 2"e	14' 2"e	15' 0"e	15' 0"e	13' 6"e	14' 0"e	14' 0"e	12' 10"e	12' 6"e	12' 6"e	12' 0"e
		24	18' 8"e	18' 7"e	15' 8"	16' 2"e	16' 2"e	14' 2"e	14' 6"e	14' 6"e	13' 2"e	13' 2"e	13' 2"e	12' 4"e	12' 2"e	12' 2"e	11' 9"e	11' 4"e	11' 4"e	11' 3"e	10' 2"e	10' 2"e	10' 2"e
600S250-43	50	12	26' 6"	23' 1"	19' 6"	24' 1"	21' 0"	17' 8"	22' 3"	19' 6"	16' 6"	21' 0"	18' 4"	15' 6"	19' 8"	17' 6"	14' 8"	18' 4"	16' 8"	14' 1"	16' 6"e	15' 6"	13' 1"
		16	24' 1"	21' 0"	17' 8"	21' 10"	19' 1"	16' 1"	20' 2"	17' 8"	15' 0"	18' 4"	16' 8"	14' 1"	17' 0"e	15' 10"	13' 4"	15' 10"e	15' 2"e	12' 9"	14' 2"e	14' 1"e	11' 10"e
		24	21' 0"	18' 4"	15' 6"	18' 4"	16' 8"	14' 1"	16' 6"e	15' 6"	13' 1"	15' 0"e	14' 7"e	12' 3"	13' 10"e	13' 10"e	11' 8"e	13' 0"e	13' 0"e	11' 2"e	11' 7"e	11' 7"e	10' 4"e
600S250-54	50	12	28' 8"	25' 0"	21' 1"	26' 0"	22' 9"	19' 2"	24' 2"	21' 1"	17' 9"	22' 9"	19' 10"	16' 9"	21' 7"	18' 10"	15' 10"	20' 8"	18' 1"	15' 2"	19' 2"	16' 9"	14' 1"
		16	26' 0"	22' 9"	19' 2"	23' 8"	20' 8"	17' 4"	22' 0"	19' 2"	16' 2"	20' 8"	18' 1"	15' 2"	19' 7"	17' 2"	14' 6"	18' 7"	16' 4"	13' 9"	16' 7"	15' 2"	12' 9"
		24	22' 9"	19' 10"	16' 9"	20' 8"	18' 1"	15' 2"	19' 2"	16' 9"	14' 1"	17' 6"	15' 9"	13' 3"	16' 2"	15' 0"	12' 7"	15' 2"e	14' 3"	12' 1"	13' 7"e	13' 3"e	11' 2"
600S250-68	50	12	30' 10"	27' 0"	22' 9"	28' 1"	24' 6"	20' 8"	26' 1"	22' 9"	19' 2"	24' 6"	21' 4"	18' 1"	23' 3"	20' 4"	17' 2"	22' 3"	19' 6"	16' 4"	20' 8"	18' 1"	15' 2"
		16	28' 1"	24' 6"	20' 8"	25' 6"	22' 3"	18' 9"	23' 8"	20' 8"	17' 4"	22' 3"	19' 6"	16' 4"	21' 2"	18' 6"	15' 7"	20' 2"	17' 8"	14' 10"	18' 9"	16' 4"	13' 9"
		24	24' 6"	21' 4"	18' 1"	22' 3"	19' 6"	16' 4"	20' 8"	18' 1"	15' 2"	19' 6"	17' 0"	14' 3"	18' 6"	16' 2"	13' 7"	17' 8"	15' 6"	13' 0"	15' 9"	14' 3"	12' 1"
600S250-97	50	12	34' 4"	30' 0"	25' 3"	31' 2"	27' 3"	23' 0"	29' 0"	25' 3"	21' 4"	27' 3"	23' 9"	20' 1"	25' 10"	22' 7"	19' 1"	24' 9"	21' 7"	18' 3"	23' 0"	20' 1"	16' 10"
		16	31' 2"	27' 3"	23' 0"	28' 4"	24' 9"	20' 10"	26' 3"	23' 0"	19' 4"	24' 9"	21' 7"	18' 3"	23' 6"	20' 7"	17' 3"	22' 6"	19' 8"	16' 7"	20' 10"	18' 3"	15' 4"
		24	27' 3"	23' 9"	20' 1"	24' 9"	21' 7"	18' 3"	23' 0"	20' 1"	16' 10"	21' 7"	18' 10"	15' 10"	20' 7"	18' 0"	15' 1"	19' 8"	17' 2"	14' 6"	18' 3"	15' 10"	13' 6"
600S250-118	50	12	36' 4"	31' 9"	26' 9"	33' 1"	28' 10"	24' 4"	30' 8"	26' 9"	22' 7"	28' 10"	25' 2"	21' 3"	27' 4"	24' 0"	20' 2"	26' 2"	22' 10"	19' 3"	24' 4"	21' 3"	17' 10"
		16	33' 1"	28' 10"	24' 4"	30' 0"	26' 2"	22' 1"	27' 10"	24' 4"	20' 6"	26' 2"	22' 10"	19' 3"	24' 10"	21' 9"	18' 4"	23' 9"	20' 9"	17' 7"	22' 1"	19' 3"	16' 3"
		24	28' 10"	25' 2"	21' 3"	26' 2"	22' 10"	19' 3"	24' 4"	21' 3"	17' 10"	22' 10"	20' 0"	16' 10"	21' 9"	19' 0"	16' 0"	20' 9"	18' 2"	15' 3"	19' 3"	16' 10"	14' 2"
600S300-54	50	12	29' 3"	25' 7"	21' 7"	26' 7"	23' 3"	19' 7"	24' 8"	21' 7"	18' 2"	23' 3"	20' 3"	17' 1"	22' 1"	19' 3"	16' 3"	21' 1"	18' 6"	15' 7"	19' 6"	17' 1"	14' 6"
		16	26' 7"	23' 3"	19' 7"	24' 2"	21' 1"	17' 9"	22' 6"	19' 7"	16' 7"	21' 1"	18' 6"	15' 7"	20' 1"	17' 6"	14' 9"	18' 10"	16' 9"	14' 2"	16' 10"	15' 7"	13' 1"
		24	23' 3"	20' 3"	17' 1"	21' 1"	18' 6"	15' 7"	19' 6"	17' 1"	14' 6"	17' 9"	16' 1"	13' 7"	16' 6"	15' 3"	12' 10"	15' 4"e	14' 8"	12' 4"	13' 9"e	13' 7"e	11' 6"
600S300-68	50	12	32' 0"	27' 10"	23' 6"	29' 0"	25' 4"	21' 4"	26' 10"	23' 6"	19' 10"	25' 4"	22' 2"	18' 8"	24' 1"	21' 0"	17' 8"	23' 0"	20' 1"	17' 0"	21' 4"	18' 8"	15' 9"
		16	29' 0"	25' 4"	21' 4"	26' 4"	23' 0"	19' 4"	24' 6"	21' 4"	18' 0"	23' 0"	20' 1"	17' 0"	21' 10"	19' 1"	16' 1"	20' 10"	18' 3"	15' 4"	19' 4"	17' 0"	14' 3"
		24	25' 4"	22' 2"	18' 8"	23' 0"	20' 1"	17' 0"	21' 4"	18' 8"	15' 9"	20' 1"	17' 7"	14' 9"	19' 1"	16' 8"	14' 1"	18' 0"	16' 0"	13' 6"	16' 1"	14' 9"	12' 6"
600S300-97	50	12	35' 9"	31' 3"	26' 4"	32' 6"	28' 4"	24' 0"	30' 2"	26' 4"	22' 2"	28' 4"	24' 9"	20' 10"	27' 0"	23' 7"	19' 10"	25' 9"	22' 6"	19' 0"	24' 0"	20' 10"	17' 8"
		16	32' 6"	28' 4"	24' 0"	29' 6"	25' 9"	21' 9"	27' 4"	24' 0"	20' 2"	25' 9"	22' 6"	19' 0"	24' 6"	21' 4"	18' 1"	23' 6"	20' 6"	17' 3"	21' 9"	19' 0"	16' 0"
		24	28' 4"	24' 9"	20' 10"	25' 9"	22' 6"	19' 0"	24' 0"	20' 10"	17' 8"	22' 6"	19' 8"	16' 7"	21' 4"	18' 8"	15' 9"	20' 6"	17' 10"	15' 1"	19' 0"	16' 7"	14' 0"
600S300-118	50	12	38' 0"	33' 2"	28' 0"	34' 6"	30' 2"	25' 4"	32' 0"	28' 0"	23' 7"	30' 2"	26' 3"	22' 2"	28' 7"	25' 0"	21' 1"	27' 4"	23' 10"	20' 2"	25' 4"	22' 2"	18' 8"
		16	34' 6"	30' 2"	25' 4"	31' 4"	27' 4"	23' 1"	29' 1"	25' 4"	21' 6"	27' 4"	23' 10"	20' 2"	26' 0"	22' 8"	19' 2"	24' 10"	21' 8"	18' 3"	23' 1"	20' 2"	17' 0"
		24	30' 2"	26' 3"	22' 2"	27' 4"	23' 10"	20' 2"	25' 4"	22' 2"	18' 8"	23' 10"	20' 10"	17' 7"	22' 8"	19' 10"	16' 9"	21' 8"	19' 0"	16' 0"	20' 2"	17' 7"	14' 10"
800S137-33	33	12	21' 3"e	21' 3"e	19' 7"e	18' 6"e	18' 6"e	17' 9"e	16' 6"e	16' 6"e	16' 6"e	15' 1"e	15' 1"e	15' 1"e	14' 0"e	14' 0"e	14' 0"e	13' 1"e	13' 1"e	13' 1"e	11' 8"e	11' 8"e	11' 8"e
		16	18' 6"e	18' 6"e	17' 9"e	16' 0"e	16' 0"e	16' 0"e	14' 3"e	14' 3"e	14' 3"e	13' 1"e	13' 1"e	13' 1"e	12' 1"e	12' 1"e	12' 1"e	11' 3"e	11' 3"e	11' 3"e	10' 1"e	10' 1"e	10' 1"e
		24	15' 1"e	15' 1"e	15' 1"e	13' 1"e	13' 1"e	13' 1"e	11' 8"e	11' 8"e	11' 8"e	10' 8"e	10' 8"e	10' 8"e	9' 10"e	9' 10"e	9' 10"e	9' 2"e	9' 2"e	9' 2"e	8' 3"e	8' 3"e	8' 3"e
800S137-43	33	12	25' 9"	25' 7"	21' 7"	22' 4"	22' 4"	19' 7"	20' 0"e	20' 0"e	18' 2"	18' 3"e	18' 3"e	17' 1"e	16' 10"e	16' 10"e	16' 3"e	15' 9"e	15' 9"e	15' 7"e	14' 1"e	14' 1"e	14' 1"e
		16	22' 4"	22' 4"	19' 7"	19' 4"e	19' 4"e	17' 9"	17' 3"e	17' 3"e	16' 6"e	15' 9"e	15' 9"e	15' 7"e	14' 7"e	14' 7"e	14' 7"e	13' 8"e	13' 8"e	13' 8"e	12' 2"e	12' 2"e	12' 2"e
		24	18' 3"e	18' 3"e	17' 1"e	15' 9"e	15' 9"e	15' 7"e	14' 1"e	14' 1"e	14' 1"e	12' 10"e	12' 10"e	12' 10"e	12' 0"e	12' 0"e	12' 0"e	11' 2"e	11' 2"e	11' 2"e	10' 0"e	10' 0"e	10' 0"e
800S137-43	50	12	29' 0"	25' 3"	21' 4"	25' 4"	23' 0"	19' 4"	22' 8"	21' 4"	18' 0"	20' 8"	20' 1"	17' 0"	19' 2"	19' 1"	16' 1"	18' 0"	18' 0"	15' 4"	16' 1"e	16' 1"e	14' 3"
		16	25' 4"	23' 0"	19' 4"	22' 0"	20' 10"	17' 7"	19' 8"	19' 4"	16' 4"	18' 0"	18' 0"	15' 4"	16' 7"e	16' 7"e	14' 7"	15' 6"e	15' 6"e	14' 0"	13' 10"e	13' 10"e	13' 0"e
		24	20' 8"	20' 1"	17' 0"	18' 0"	18' 0"	15' 4"	16' 1"e	16' 1"e	14' 3"	14' 8"e	14' 8"e	13' 6"e	13' 7"e	13' 7"e	12' 9"e	12' 8"e	12' 8"e	12' 2"e	11' 4"e	11' 4"e	11' 4"e
800S137-54	50	12	31' 6"	27' 6"	23' 2"	28' 7"	25' 0"	21' 1"	26' 6"	23' 2"	19' 6"	24' 4"	21' 9"	18' 4"	22' 7"	20' 8"	17' 6"	21' 1"	19' 9"	16' 8"	18' 10"	18' 4"	15' 6"
		16	28' 7"	25' 0"	21' 1"	25' 10"	22' 8"	19' 1"	23' 2"	21' 1"	17' 9"	21' 1"	19' 9"	16' 8"	19' 7"	18' 9"	15' 10"	18' 3"	18' 0"	15' 2"	16' 4"	16' 4"	14' 1"
		24	24' 4"	21' 9"	18' 4"	21' 1"	19' 9"	16' 8"	18' 10"	18' 4"	15' 6"	17' 3"	17' 3"	14' 7"	16' 0"	16' 0"	13' 10"	14' 10"e	14' 10"e	13' 3"	13' 4"e	13' 4"e	12' 3"e
800S137-68	50	12	34' 0"	29' 8"	25' 1"	30' 10"	27' 0"	22' 9"	28' 8"	25' 1"	21' 1"	27' 0"	23' 7"	19' 10"	25' 7"	22' 4"	18' 10"	24' 6"	21' 4"	18' 1"	22' 2"	19' 10"	16' 9"
		16	30' 10"	27' 0"	22' 9"	28' 1"	24' 6"	20' 8"	26' 1"	22' 9"	19' 2"	24' 6"	21' 4"	18' 1"	23' 0"	20' 4"	17' 2"	21' 6"	19' 6"	16' 4"	19' 3"	18' 1"	15' 2"
		24	27' 0"	23' 7"	19' 10"	24' 6"	21' 4"	18' 1"	22' 2"	19' 10"	16' 9"	20' 3"	18' 8"	15' 9"	18' 9"	17' 9"	15' 0"	17' 7"	17' 0"	14' 3"	15' 8"	15' 8"	13' 3"
800S137-97	50	12	37' 8"	33' 0"	27' 9"	34' 3"	29' 10"	25' 3"	31' 9"	27' 9"	23' 4"	29' 10"	26' 2"	22' 1"	28' 4"	24' 9"	21' 0"	27' 2"	23' 9"	20' 0"	25' 3"	22' 1"	18' 7"
		16	34' 3"	29' 10"	25' 3"	31' 1"	27' 2"	22' 10"	28' 10"	25' 3"	21' 3"	27' 2"	23' 9"	20' 0"	25' 9"	22' 7"	19' 0"	24' 8"	21' 7"	18' 2"	22' 10"	20' 0"	16' 10"
		24	29' 10"	26' 2"	22' 1"	27' 2"	23' 9"	20' 0"	25' 3"	22' 1"	18' 7"	23' 9"	20' 9"	17' 6"	22' 7"	19' 8"	16' 7"	21' 7"	18' 10"	15' 10"	20' 0"	17' 6"	14' 9"
800S162-33	33	12	23' 3"e	23' 3"e	20' 4"e	20' 1"e	20' 1"e	18' 6"e	18' 0"e	18' 0"e	17' 2"e	16' 4"e	16' 4"e	16' 2"e	15' 2"e	15' 2"e	15' 2"e	14' 2"e	14' 2"e	14' 2"e	12' 8"e	12' 8"e	12' 8"e
		16	20' 1"e	20' 1"e	18' 6"e	17' 4"e	17' 4"e	16' 9"e	15' 7"e	15' 7"e	15' 7"e	14' 2"e	14' 2"e	14' 2"e	13' 2"e	13' 2"e	13' 2"e	12' 3"e	12' 3"e	12' 3"e	11' 0"e	11' 0"e	11' 0"e
		24	16' 4"e	16' 4"e	16' 2"e	14' 2"e	14' 2"e	14' 2"e	12' 8"e	12' 8"e	12' 8"e	11' 7"e	11' 7"e	11' 7"e	10' 9"e	10' 9"e	10' 9"e	10' 1"e	10' 1"e	10' 1"e	9' 0"e	9' 0"e	9' 0"e
800S162-43	33	12	28' 0"	26' 7"	22' 4"	24' 2"	24' 2"	20' 4"	21' 8"e	21' 8"e	18' 10"	19' 9"e	19' 9"e	17' 9"e	18' 3"e	18' 3"e	16' 10"e	17' 1"e	17' 1"e	16' 2"e	15' 3"e	15' 3"e	15' 0"e
		16	24' 2"	24' 2"	20' 4"	21' 0"e	21' 0"e	18' 6"	18' 9"e	18' 9"e	17' 2"e	17' 1"e	17' 1"e	16' 2"e	15' 10"e	15' 10"e	15' 4"e	14' 9"e	14' 9"e	14' 8"e	13' 3"e	13' 3"e	13' 3"e
		24	19' 9"e	19' 9"e	17' 9"e	17' 1"e	17' 1"e	16' 2"e	15' 3"e	15' 3"e	15' 0"e	14' 0"e	14' 0"e	14' 0"e	13' 0"e	13' 0"e	13' 0"e	12' 1"e	12' 1"e	12' 1"e	10' 9"e	10' 9"e	10' 9"e
800S162-43	50	12	30' 2"	26' 4"	22' 3"	27' 4"	24' 0"	20' 2"	24' 8"	22' 3"	18' 9"	22' 6"	20' 10"	17' 8"	20' 10"	19' 10"	16' 9"	19' 6"e	19' 0"e	16' 0"	17' 4"e	17' 4"e	14' 10"
		16	27' 4"	24' 0"	20' 2"	23' 10"	21' 9"	18' 4"	21' 4"	20' 2"	17' 1"	19' 6"e	19' 0"e	16' 0"	18' 1"e	18' 1"e	15' 2"	16' 10"e	16' 10"e	14' 7"e	15' 1"e	15' 1"e	13' 6"e
		24	22' 6"	20' 10"	17' 8"	19' 6"e	19' 0"e	16' 0"	17' 4"e	17' 4"e	14' 10"	15' 10"e	15' 10"e	14' 0"e	14' 8"e	14' 8"e	13' 3"e	13' 9"e	13' 9"e	12' 8"e	12' 3"e	12' 3"e	11' 9"e
800S162-54	50	12	32' 8"	28' 7"	24' 1"	29' 8"	26' 0"	21' 10"	27' 7"	24' 1"	20' 3"	26' 0"	22' 8"	19' 1"	24' 4"	21' 7"	18' 2"	22' 10"	20' 7"	17' 4"	20' 4"	19' 1"	16' 1"
		16	29' 8"	26' 0"	21' 10"	27' 0"	23' 7"	19' 10"	25' 0"	21' 10"	18' 6"	22' 10"	20' 7"	17' 4"	21' 2"	19' 7"	16' 6"	19' 9"	18' 8"	15' 9"	17' 8"e	17' 4"e	14' 8"
		24	26' 0"	22' 8"	19' 1"	22' 10"	20' 7"	17' 4"	20' 4"	19' 1"	16' 1"	18' 8"	18' 0"	15' 2"	17' 3"e	17' 1"e	14' 4"	16' 2"e	16' 2"e	13' 9"	14' 6"e	14' 6"e	12' 9"e
800S162-68	50	12	35' 4"	30' 10"	26' 1"	32' 1"	28' 1"	23' 8"	29' 9"	26' 1"	22' 0"	28' 1"	24' 6"	20' 8"	26' 8"	23' 3"	19' 8"	25' 6"	22' 3"	18' 9"	23' 8"	20' 8"	17' 4"
		16	32' 1"	28' 1"	23' 8"	29' 2"	25' 6"	21' 6"	27' 1"	23' 8"	20' 0"	25' 6"	22' 3"	18' 9"	24' 2"	21' 2"	17' 10"	23' 2"	20' 2"	17' 1"	20' 8"	18' 9"	15' 10"
		24	28' 1"	24' 6"	20' 8"	25' 6"	22' 3"	18' 9"	23' 8"	20' 8"	17' 4"	21' 9"	19' 6"	16' 4"	20' 2"	18' 6"	15' 7"	18' 10"	17' 8"	14' 10"	16' 10"	16' 4"	13' 9"

NOTE: See page 18 for Table Notes.

CURTAINWALL LIMITING HEIGHTS - SINGLE SPAN

MEMBER	F_y (ksi)	SPACING (in.) o.c.	15 psf			20 psf			25 psf			30 psf			35 psf			40 psf			50 psf		
			L/240	L/360	L/600	L/240	L/360	L/600	L/240	L/360	L/600	L/240	L/360	L/600	L/240	L/360	L/600	L/240	L/360	L/600	L/240	L/360	L/600
800S162-97	50	12	39' 3"	34' 3"	28' 10"	35' 8"	31' 2"	26' 3"	33' 1"	28' 10"	24' 4"	31' 2"	27' 2"	23' 0"	29' 7"	25' 10"	21' 9"	28' 3"	24' 8"	20' 10"	26' 3"	23' 0"	19' 4"
		16	35' 8"	31' 2"	26' 3"	32' 4"	28' 3"	23' 10"	30' 1"	26' 3"	22' 2"	28' 3"	24' 8"	20' 10"	26' 10"	23' 6"	19' 9"	25' 8"	22' 6"	19' 0"	23' 10"	20' 10"	17' 7"
		24	31' 2"	27' 2"	23' 0"	28' 3"	24' 8"	20' 10"	26' 3"	23' 0"	19' 4"	24' 8"	21' 7"	18' 2"	23' 6"	20' 6"	17' 3"	22' 6"	19' 7"	16' 7"	20' 10"	18' 2"	15' 4"
800S162-118	50	12	41' 7"	36' 3"	30' 7"	37' 9"	33' 0"	27' 9"	35' 1"	30' 7"	25' 9"	33' 0"	28' 9"	24' 3"	31' 3"	27' 4"	23' 1"	30' 0"	26' 2"	22' 1"	27' 9"	24' 3"	20' 6"
		16	37' 9"	33' 0"	27' 9"	34' 3"	30' 0"	25' 3"	31' 10"	27' 9"	23' 6"	30' 0"	26' 2"	22' 1"	28' 6"	24' 10"	21' 0"	27' 2"	23' 9"	20' 1"	25' 3"	22' 1"	18' 7"
		24	33' 0"	28' 9"	24' 3"	30' 0"	26' 2"	22' 1"	27' 9"	24' 3"	20' 6"	26' 2"	22' 10"	19' 3"	24' 10"	21' 8"	18' 3"	23' 9"	20' 9"	17' 6"	22' 1"	19' 3"	16' 3"
800S200-43	33	12	30' 1"	28' 0"	23' 8"	26' 0"e	25' 6"e	21' 6"	23' 3"e	23' 3"e	20' 0"e	21' 3"e	21' 3"e	18' 9"e	19' 8"e	19' 8"e	17' 9"e	18' 4"e	18' 4"e	17' 1"e	16' 6"e	16' 6"e	15' 9"e
		16	26' 0"e	25' 6"e	21' 6"	22' 6"e	22' 6"e	19' 6"e	20' 2"e	20' 2"e	18' 1"e	18' 4"e	18' 4"e	17' 1"e	17' 0"e	17' 0"e	16' 2"e	15' 10"e	15' 10"e	15' 6"e	14' 3"e	14' 3"e	14' 3"e
		24	21' 3"e	21' 3"e	18' 9"e	18' 4"e	18' 4"e	17' 1"e	16' 6"e	16' 6"e	15' 9"e	15' 0"e	15' 0"e	14' 10"e	13' 10"e	13' 10"e	13' 10"e	13' 0"e	13' 0"e	13' 0"e	11' 7"e	11' 7"e	11' 7"e
800S200-43	50	12	32' 1"	28' 0"	23' 8"	29' 2"	25' 6"	21' 6"	26' 6"	23' 8"	20' 0"	24' 2"	22' 3"	18' 9"	22' 4"e	21' 1"	17' 9"	21' 0"e	20' 2"e	17' 1"	18' 8"e	18' 8"e	15' 9"e
		16	29' 2"	25' 6"	21' 6"	25' 8"	23' 2"	19' 6"	23' 0"e	21' 6"	18' 1"	21' 0"e	20' 2"e	17' 1"	19' 4"e	19' 2"e	16' 2"e	18' 1"e	18' 1"e	15' 6"e	16' 2"e	16' 2"e	14' 4"e
		24	24' 2"	22' 3"	18' 9"	21' 0"e	20' 2"e	17' 1"	18' 8"e	18' 8"e	15' 9"e	17' 1"e	17' 1"e	14' 10"e	15' 9"e	15' 9"e	14' 2"e	14' 9"e	14' 9"e	13' 6"e	13' 3"e	13' 3"e	12' 7"e
800S200-54	50	12	34' 6"	30' 1"	25' 4"	31' 3"	27' 4"	23' 1"	29' 1"	25' 4"	21' 4"	27' 4"	23' 10"	20' 2"	26' 0"	22' 8"	19' 2"	24' 6"	21' 8"	18' 3"	21' 10"	20' 2"	17' 0"
		16	31' 3"	27' 4"	23' 1"	28' 6"	24' 10"	21' 0"	26' 4"	23' 1"	19' 6"	24' 6"	21' 8"	18' 3"	22' 8"	20' 7"	17' 4"	21' 2"	19' 8"	16' 8"	19' 0"e	18' 3"e	15' 6"
		24	27' 4"	23' 10"	20' 2"	24' 6"	21' 8"	18' 3"	21' 10"	20' 2"	17' 0"	20' 0"e	19' 0"	16' 0"	18' 6"e	18' 0"e	15' 2"	17' 3"e	17' 2"e	14' 6"e	15' 6"e	15' 6"e	13' 6"e
800S200-68	50	12	37' 0"	32' 4"	27' 3"	33' 8"	29' 4"	24' 9"	31' 2"	27' 3"	23' 0"	29' 4"	25' 8"	21' 8"	27' 10"	24' 4"	20' 7"	26' 8"	23' 3"	19' 8"	24' 9"	21' 8"	18' 3"
		16	33' 8"	29' 4"	24' 9"	30' 7"	26' 8"	22' 6"	28' 4"	24' 9"	20' 10"	26' 8"	23' 3"	19' 8"	25' 4"	22' 2"	18' 8"	24' 3"	21' 2"	17' 10"	22' 2"	19' 8"	16' 7"
		24	29' 4"	25' 8"	21' 8"	26' 8"	23' 3"	19' 8"	24' 9"	21' 8"	18' 3"	23' 3"	20' 4"	17' 2"	21' 7"	19' 4"	16' 3"	20' 2"	18' 6"	15' 7"	18' 1"e	17' 2"	14' 6"
800S200-97	50	12	41' 2"	36' 0"	30' 4"	37' 4"	32' 8"	27' 7"	34' 9"	30' 4"	25' 7"	32' 8"	28' 7"	24' 1"	31' 1"	27' 1"	22' 10"	29' 8"	26' 0"	21' 10"	27' 7"	24' 1"	20' 3"
		16	37' 4"	32' 8"	27' 7"	34' 0"	29' 8"	25' 1"	31' 7"	27' 7"	23' 3"	29' 8"	26' 0"	21' 10"	28' 2"	24' 8"	20' 9"	27' 0"	23' 7"	19' 10"	25' 1"	21' 10"	18' 6"
		24	32' 8"	28' 7"	24' 1"	29' 8"	26' 0"	21' 10"	27' 7"	24' 1"	20' 3"	26' 0"	22' 8"	19' 1"	24' 8"	21' 6"	18' 2"	23' 7"	20' 7"	17' 4"	21' 10"	19' 1"	16' 1"
800S200-118	50	12	43' 7"	38' 1"	32' 2"	39' 8"	34' 7"	29' 2"	36' 9"	32' 2"	27' 1"	34' 7"	30' 3"	25' 6"	32' 10"	28' 8"	24' 2"	31' 6"	27' 6"	23' 2"	29' 2"	25' 6"	21' 6"
		16	39' 8"	34' 7"	29' 2"	36' 0"	31' 6"	26' 6"	33' 4"	29' 2"	24' 7"	31' 6"	27' 6"	23' 2"	29' 10"	26' 1"	22' 0"	28' 7"	25' 0"	21' 1"	26' 6"	23' 2"	19' 7"
		24	34' 7"	30' 3"	25' 6"	31' 6"	27' 6"	23' 2"	29' 2"	25' 6"	21' 6"	27' 6"	24' 0"	20' 3"	26' 1"	22' 9"	19' 2"	25' 0"	21' 9"	18' 4"	23' 2"	20' 3"	17' 1"
800S250-43	33	12	30' 9"	29' 3"	24' 8"	26' 8"e	26' 7"e	22' 4"	23' 10"e	23' 10"e	20' 9"e	21' 9"e	21' 9"e	19' 7"e	20' 2"e	20' 2"e	18' 7"e	18' 10"e	18' 10"e	17' 9"e	16' 10"e	16' 10"e	16' 6"e
		16	26' 8"e	26' 7"e	22' 4"	23' 1"e	23' 1"e	20' 4"e	20' 8"e	20' 8"e	18' 10"e	18' 10"e	18' 10"e	17' 9"e	17' 6"e	17' 6"e	16' 10"e	16' 3"e	16' 3"e	16' 2"e	14' 7"e	14' 7"e	14' 7"e
		24	21' 9"e	21' 9"e	19' 7"e	18' 10"e	18' 10"e	17' 9"e	16' 10"e	16' 10"e	16' 6"e	15' 4"e	15' 4"e	15' 4"e	14' 3"e	14' 3"e	14' 3"e	13' 3"e	13' 3"e	13' 3"e	11' 10"e	11' 10"e	11' 10"e
800S250-43	50	12	33' 1"	29' 0"	24' 4"	30' 1"	26' 3"	22' 2"	27' 1"	24' 4"	20' 7"	24' 8"	23' 0"	19' 4"	22' 10"e	21' 9"e	18' 4"	21' 4"e	20' 10"e	17' 7"	19' 2"e	19' 2"e	16' 3"e
		16	30' 1"	26' 3"	22' 2"	26' 2"	23' 10"	20' 2"	23' 6"e	22' 2"	18' 8"	21' 4"e	20' 10"e	17' 7"	19' 9"e	19' 9"e	16' 8"e	18' 6"e	18' 6"e	16' 0"e	16' 7"e	16' 7"e	14' 10"e
		24	24' 8"	23' 0"	19' 4"	21' 4"e	20' 10"e	17' 7"	19' 2"e	19' 2"e	16' 3"e	17' 6"e	17' 6"e	15' 4"e	16' 2"e	16' 2"e	14' 7"e	15' 1"e	15' 1"e	14' 0"e	13' 6"e	13' 6"e	13' 0"e
800S250-54	50	12	35' 9"	31' 3"	26' 4"	32' 7"	28' 6"	24' 0"	30' 2"	26' 4"	22' 3"	28' 6"	24' 10"	21' 0"	26' 9"	23' 7"	19' 10"	25' 1"	22' 7"	19' 0"	22' 4"	21' 0"	17' 8"
		16	32' 7"	28' 6"	24' 0"	29' 7"	25' 9"	21' 9"	27' 6"	24' 0"	20' 2"	25' 1"	22' 7"	19' 0"	23' 2"	21' 4"	18' 1"	21' 8"e	20' 6"	17' 3"	19' 4"e	19' 0"e	16' 1"
		24	28' 6"	24' 10"	21' 0"	25' 1"	22' 7"	19' 0"	22' 4"	21' 0"	17' 8"	20' 6"e	19' 8"e	16' 7"	19' 0"e	18' 8"e	15' 9"	17' 8"e	17' 8"e	15' 1"e	15' 10"e	15' 10"e	14' 0"e
800S250-68	50	12	38' 8"	33' 9"	28' 6"	35' 1"	30' 8"	25' 10"	32' 7"	28' 6"	24' 0"	30' 8"	26' 9"	22' 7"	29' 2"	25' 6"	21' 6"	27' 10"	24' 4"	20' 6"	25' 10"	22' 7"	19' 1"
		16	35' 1"	30' 8"	25' 10"	31' 10"	27' 10"	23' 6"	29' 7"	25' 10"	21' 9"	27' 10"	24' 4"	20' 6"	26' 6"	23' 1"	19' 6"	25' 3"	22' 1"	18' 8"	22' 8"	20' 6"	17' 3"
		24	30' 8"	26' 9"	22' 7"	27' 10"	24' 4"	20' 6"	25' 10"	22' 7"	19' 1"	24' 0"	21' 3"	17' 10"	22' 2"	20' 2"	17' 0"	20' 9"	19' 3"	16' 3"	18' 7"e	17' 10"e	15' 1"
800S250-97	50	12	43' 1"	37' 7"	31' 8"	39' 1"	34' 2"	28' 9"	36' 3"	31' 8"	26' 9"	34' 2"	29' 10"	25' 2"	32' 6"	28' 4"	23' 10"	31' 1"	27' 1"	22' 10"	28' 9"	25' 2"	21' 2"
		16	39' 1"	34' 2"	28' 9"	35' 6"	31' 1"	26' 2"	33' 0"	28' 9"	24' 3"	31' 1"	27' 1"	22' 10"	29' 6"	25' 9"	21' 8"	28' 2"	24' 7"	20' 9"	26' 2"	22' 10"	19' 3"
		24	34' 2"	29' 10"	25' 2"	31' 1"	27' 1"	22' 10"	28' 9"	25' 2"	21' 2"	27' 1"	23' 8"	20' 0"	25' 9"	22' 6"	19' 0"	24' 7"	21' 6"	18' 2"	22' 10"	20' 0"	16' 10"
800S250-118	50	12	45' 8"	39' 10"	33' 7"	41' 6"	36' 2"	30' 7"	38' 6"	33' 7"	28' 4"	36' 2"	31' 8"	26' 8"	34' 4"	30' 1"	25' 4"	32' 10"	28' 9"	24' 3"	30' 7"	26' 8"	22' 6"
		16	41' 6"	36' 2"	30' 7"	37' 8"	32' 10"	27' 9"	35' 0"	30' 7"	25' 9"	32' 10"	28' 9"	24' 3"	31' 3"	27' 3"	23' 0"	29' 10"	26' 1"	22' 0"	27' 9"	24' 3"	20' 6"
		24	36' 2"	31' 8"	26' 8"	32' 10"	28' 9"	24' 3"	30' 7"	26' 8"	22' 6"	28' 9"	25' 1"	21' 2"	27' 3"	23' 10"	20' 1"	26' 1"	22' 9"	19' 3"	24' 3"	21' 2"	17' 10"
800S300-54	50	12	36' 7"	32' 0"	26' 10"	33' 2"	29' 0"	24' 6"	30' 9"	26' 10"	22' 8"	29' 0"	25' 4"	21' 4"	27' 2"	24' 1"	20' 3"	25' 4"	23' 0"	19' 4"	22' 9"	21' 4"	18' 0"
		16	33' 2"	29' 0"	24' 6"	30' 2"	26' 4"	22' 2"	27' 10"	24' 6"	20' 8"	25' 4"	23' 0"	19' 4"	23' 7"	21' 10"	18' 6"	22' 0"e	20' 10"	17' 8"	19' 8"e	19' 4"e	16' 4"
		24	29' 0"	25' 4"	21' 4"	25' 4"	23' 0"	19' 4"	22' 9"	21' 4"	18' 0"	20' 9"e	20' 1"e	17' 0"	19' 2"e	19' 1"e	16' 1"	18' 0"e	18' 0"e	15' 4"e	16' 1"e	16' 1"e	14' 3"e
800S300-68	50	12	39' 9"	34' 9"	29' 4"	36' 2"	31' 7"	26' 8"	33' 7"	29' 4"	24' 9"	31' 7"	27' 7"	23' 3"	30' 0"	26' 2"	22' 1"	28' 8"	25' 1"	21' 2"	26' 8"	23' 3"	19' 8"
		16	36' 2"	31' 7"	26' 8"	32' 10"	28' 8"	24' 2"	30' 6"	26' 8"	22' 6"	28' 8"	25' 1"	21' 2"	27' 3"	23' 9"	20' 1"	25' 10"	22' 9"	19' 2"	23' 1"	21' 2"	17' 10"
		24	31' 7"	27' 7"	23' 3"	28' 8"	25' 1"	21' 2"	26' 8"	23' 3"	19' 8"	24' 4"	21' 10"	18' 6"	22' 7"	20' 9"	17' 7"	21' 1"	19' 10"	16' 9"	18' 10"e	18' 6"e	15' 7"
800S300-97	50	12	44' 8"	39' 0"	32' 10"	40' 7"	35' 6"	29' 10"	37' 8"	32' 10"	27' 9"	35' 6"	31' 0"	26' 1"	33' 8"	29' 4"	24' 9"	32' 2"	28' 2"	23' 8"	29' 10"	26' 1"	22' 0"
		16	40' 7"	35' 6"	29' 10"	36' 10"	32' 2"	27' 2"	34' 3"	29' 10"	25' 2"	32' 2"	28' 2"	23' 8"	30' 7"	26' 8"	22' 7"	29' 3"	25' 7"	21' 7"	27' 2"	23' 8"	20' 0"
		24	35' 6"	31' 0"	26' 1"	32' 2"	28' 2"	23' 8"	29' 10"	26' 1"	22' 0"	28' 2"	24' 7"	20' 8"	26' 8"	23' 4"	19' 8"	25' 7"	22' 3"	18' 10"	23' 8"	20' 8"	17' 6"
800S300-118	50	12	47' 6"	41' 6"	35' 0"	43' 2"	37' 8"	31' 9"	40' 1"	35' 0"	29' 6"	37' 8"	32' 10"	27' 9"	35' 9"	31' 3"	26' 4"	34' 3"	29' 10"	25' 2"	31' 9"	27' 9"	23' 4"
		16	43' 2"	37' 8"	31' 9"	39' 2"	34' 3"	28' 10"	36' 4"	31' 9"	26' 9"	34' 3"	29' 10"	25' 2"	32' 6"	28' 4"	24' 0"	31' 1"	27' 2"	22' 10"	28' 10"	25' 2"	21' 3"
		24	37' 8"	32' 10"	27' 9"	34' 3"	29' 10"	25' 2"	31' 9"	27' 9"	23' 4"	29' 10"	26' 1"	22' 0"	28' 4"	24' 9"	20' 10"	27' 2"	23' 9"	20' 0"	25' 2"	22' 0"	18' 7"

NOTE: See page 18 for Table Notes.

For more information, please contact Marino\WARE® Technical Services at 866.545.1545
This technical information reflects the most current information available and supersedes any and all
previous publications effective February 17, 2023 | MW-Cold Formed Catalog | © WARE Industries, Inc., 2023

CURTAINWALL LIMITING HEIGHTS - DOUBLE SPAN

NOTES:

1. Listed wind pressures represent the calculated design wind pressure (1.0W based on 2009 IBC or 0.6W based on 2012 IBC and later editions). For deflection calculations, the listed wind pressures have been multiplied by 0.70 as per IBC.
2. Studs must be braced against rotation and lateral displacement at all supports.
3. Studs are assumed to be adequately braced at a maximum spacing of L_u to develop the full allowable moment, M_a .
4. Web crippling check is based on 1" of bearing at end supports and 3" of bearing at interior support.
5. Shear and web crippling capacity at end supports have NOT been reduced for punchouts. At interior support, the shear and web crippling capacity has been reduced for the presence of punchout adjacent to the support.
6. Combined bending and shear check at interior support is based on unreinforced web as per AISI S100. The shear and combined bending and shear check at interior support have been reduced for the presence of punchouts adjacent to the support.
7. Listed "Double Span" limiting heights are based on the distance from either end to the center of the interior support, with the stud continuous past the interior support.
8. "e"- web stiffeners required at ends. "a" web stiffeners required at ends and at interior supports, "i" web stiffeners required at interior supports.
9. See General Notes on Page 6.

MEMBER	F_y (ksi)	SPACING (in.) o.c.	15 psf			20 psf			25 psf			30 psf			35 psf			40 psf			50 psf		
			L/240	L/360	L/600	L/240	L/360	L/600	L/240	L/360	L/600	L/240	L/360	L/600	L/240	L/360	L/600	L/240	L/360	L/600	L/240	L/360	L/600
362S137-33	33	12	14' 0"	14' 0"	14' 0"	12' 1"	12' 1"	12' 1"	10' 9"	10' 9"	10' 9"	9' 9"	9' 9"	9' 9"	9' 0"i	9' 0"i	9' 0"i	8' 4"i	8' 4"i	8' 4"i	7' 4"i	7' 4"i	7' 4"i
		16	12' 1"	12' 1"	12' 1"	10' 4"	10' 4"	10' 4"	9' 2"i	9' 2"i	9' 2"i	8' 4"i	8' 4"i	8' 4"i	7' 8"i	7' 8"i	7' 8"i	7' 1"i	7' 1"i	7' 1"i	6' 3"i	6' 3"i	6' 3"i
		24	9' 9"	9' 9"	9' 9"	8' 4"i	8' 4"i	8' 4"i	7' 4"i	7' 4"i	7' 4"i	6' 8"i	6' 8"i	6' 8"i	6' 1"i	6' 1"i	6' 1"i	5' 8"a	5' 8"a	5' 8"a	5' 0"a	5' 0"a	5' 0"a
362S137-43	33	12	16' 6"	16' 6"	15' 4"	14' 3"	14' 3"	14' 0"	12' 8"	12' 8"	12' 8"	11' 6"	11' 6"	11' 6"	10' 7"	10' 7"	10' 7"	9' 10"	9' 10"	9' 10"	8' 9"	8' 9"	8' 9"
		16	14' 3"	14' 3"	14' 0"	12' 3"	12' 3"	12' 3"	10' 10"	10' 10"	10' 10"	9' 10"	9' 10"	9' 10"	9' 1"	9' 1"	9' 1"	8' 6"	8' 6"	8' 6"	7' 6"	7' 6"	7' 6"
		24	11' 6"	11' 6"	11' 6"	9' 10"	9' 10"	9' 10"	8' 9"	8' 9"	8' 9"	7' 10"	7' 10"	7' 10"	7' 3"	7' 3"	7' 3"	6' 9"i	6' 9"i	6' 9"i	5' 10"i	5' 10"i	5' 10"i
362S137-43	50	12	19' 2"	18' 3"	15' 4"	16' 7"	16' 7"	14' 0"	14' 10"	14' 10"	13' 0"	13' 7"	13' 7"	12' 2"	12' 6"	12' 6"	11' 7"	11' 8"	11' 8"	11' 1"	10' 4"	10' 4"	10' 3"
		16	16' 7"	16' 7"	14' 0"	14' 4"	14' 4"	12' 8"	12' 10"	12' 10"	11' 9"	11' 8"	11' 8"	11' 1"	10' 8"	10' 8"	10' 7"	10' 0"	10' 0"	10' 0"	8' 9"	8' 9"	8' 9"
		24	13' 7"	13' 7"	12' 2"	11' 8"	11' 8"	11' 1"	10' 4"	10' 4"	10' 3"	9' 4"	9' 4"	9' 4"	8' 7"	8' 7"	8' 7"	8' 0"	8' 0"	8' 0"	7' 0"	7' 0"	7' 0"
362S137-54	50	12	22' 1"	19' 7"	16' 6"	19' 2"	17' 9"	15' 0"	17' 1"	16' 6"	13' 10"	15' 7"	15' 6"	13' 1"	14' 4"	14' 4"	12' 4"	13' 4"	13' 4"	11' 10"	11' 10"	11' 10"	11' 0"
		16	19' 2"	17' 9"	15' 0"	16' 7"	16' 2"	13' 7"	14' 9"	14' 9"	12' 7"	13' 4"	13' 4"	11' 10"	12' 4"	12' 4"	11' 3"	11' 6"	11' 6"	10' 9"	10' 2"	10' 2"	10' 0"
		24	15' 7"	15' 6"	13' 1"	13' 4"	13' 4"	11' 10"	11' 10"	11' 10"	11' 0"	10' 9"	10' 9"	10' 4"	9' 10"	9' 10"	9' 10"	9' 2"	9' 2"	9' 2"	8' 1"	8' 1"	8' 1"
362S137-68	50	12	23' 10"	20' 10"	17' 7"	21' 8"	19' 0"	16' 0"	19' 4"	17' 7"	14' 10"	17' 7"	16' 7"	14' 0"	16' 2"	15' 9"	13' 3"	15' 1"	15' 1"	12' 8"	13' 4"	13' 4"	11' 9"
		16	21' 8"	19' 0"	16' 0"	18' 8"	17' 3"	14' 7"	16' 7"	16' 0"	13' 6"	15' 1"	15' 1"	12' 8"	13' 10"	13' 10"	12' 1"	12' 10"	12' 10"	11' 7"	11' 4"	11' 4"	10' 8"
		24	17' 7"	16' 7"	14' 0"	15' 1"	15' 1"	12' 8"	13' 4"	13' 4"	11' 9"	12' 1"	12' 1"	11' 1"	11' 1"	11' 1"	10' 7"	10' 3"	10' 3"	10' 1"	9' 0"	9' 0"	9' 0"
362S137-97	50	12	26' 3"	23' 0"	19' 4"	23' 10"	20' 10"	17' 7"	22' 2"	19' 4"	16' 4"	20' 10"	18' 3"	15' 4"	19' 10"	17' 3"	14' 7"	18' 6"	16' 7"	14' 0"	16' 2"	15' 4"	13' 0"
		16	23' 10"	20' 10"	17' 7"	21' 8"	19' 0"	16' 0"	20' 2"	17' 7"	14' 10"	18' 6"	16' 7"	14' 0"	16' 10"	15' 9"	13' 3"	15' 7"	15' 1"	12' 8"	13' 7"	13' 7"	11' 9"
		24	20' 10"	18' 3"	15' 4"	18' 6"	16' 7"	14' 0"	16' 2"	15' 4"	13' 0"	14' 6"	14' 6"	12' 2"	13' 1"	13' 1"	11' 7"	12' 1"	12' 1"	11' 1"	10' 4"	10' 4"	10' 3"
362S162-33	33	12	15' 0"	15' 0"	14' 10"	12' 10"	12' 10"	12' 10"	11' 6"	11' 6"	11' 6"	10' 4"i	10' 4"i	10' 4"i	9' 7"i	9' 7"i	9' 7"i	8' 10"i	8' 10"i	8' 10"i	7' 10"i	7' 10"i	7' 10"i
		16	12' 10"	12' 10"	12' 10"	11' 1"	11' 1"	11' 1"	9' 10"i	9' 10"i	9' 10"i	8' 10"i	8' 10"i	8' 10"i	8' 2"i	8' 2"i	8' 2"i	7' 7"i	7' 7"i	7' 7"i	6' 8"a	6' 8"a	6' 8"a
		24	10' 4"i	10' 4"i	10' 4"i	8' 10"i	8' 10"i	8' 10"i	7' 10"i	7' 10"i	7' 10"i	7' 1"i	7' 1"i	7' 1"i	6' 6"a	6' 6"a	6' 6"a	6' 0"a	6' 0"a	6' 0"a	5' 2"a	5' 2"a	5' 2"a
362S162-43	33	12	17' 9"	17' 9"	16' 2"	15' 3"	15' 3"	14' 8"	13' 7"	13' 7"	13' 7"	12' 4"	12' 4"	12' 4"	11' 4"	11' 4"	11' 4"	10' 7"	10' 7"	10' 7"	9' 4"	9' 4"	9' 4"
		16	15' 3"	15' 3"	14' 8"	13' 2"	13' 2"	13' 2"	11' 8"	11' 8"	11' 8"	10' 7"	10' 7"	10' 7"	9' 9"	9' 9"	9' 9"	9' 1"	9' 1"	9' 1"	8' 0"i	8' 0"i	8' 0"i
		24	12' 4"	12' 4"	12' 4"	10' 7"	10' 7"	10' 7"	9' 4"	9' 4"	9' 4"	8' 6"	8' 6"	8' 6"	7' 9"i	7' 9"i	7' 9"i	7' 2"i	7' 2"i	7' 2"i	6' 3"i	6' 3"i	6' 3"i
362S162-43	50	12	20' 4"	19' 2"	16' 2"	17' 7"	17' 4"	14' 8"	15' 8"	15' 8"	13' 7"	14' 2"	14' 2"	12' 9"	13' 1"	13' 1"	12' 2"	12' 2"	12' 2"	11' 8"	10' 9"	10' 9"	10' 9"
		16	17' 7"	17' 4"	14' 8"	15' 1"	15' 1"	13' 3"	13' 6"	13' 6"	12' 4"	12' 2"	12' 2"	11' 8"	11' 2"	11' 2"	11' 1"	10' 6"	10' 6"	10' 6"	9' 2"	9' 2"	9' 2"
		24	14' 2"	14' 2"	12' 9"	12' 2"	12' 2"	11' 8"	10' 9"	10' 9"	10' 9"	9' 9"	9' 9"	9' 9"	9' 0"	9' 0"	9' 0"	8' 3"	8' 3"	8' 3"	7' 3"	7' 3"	7' 3"
362S162-54	50	12	23' 6"	20' 6"	17' 3"	20' 8"	18' 7"	15' 8"	18' 4"	17' 3"	14' 7"	16' 9"	16' 3"	13' 8"	15' 4"	15' 4"	13' 1"	14' 4"	14' 4"	12' 6"	12' 9"	12' 9"	11' 7"
		16	20' 8"	18' 7"	15' 8"	17' 9"	16' 10"	14' 3"	15' 9"	15' 8"	13' 3"	14' 4"	14' 4"	12' 6"	13' 2"	13' 2"	11' 10"	12' 3"	12' 3"	11' 3"	10' 10"	10' 10"	10' 6"
		24	16' 9"	16' 3"	13' 8"	14' 4"	14' 4"	12' 6"	12' 9"	12' 9"	11' 7"	11' 7"	11' 7"	10' 10"	10' 7"	10' 7"	10' 4"	9' 9"	9' 9"	9' 9"	8' 8"	8' 8"	8' 8"
362S162-68	50	12	25' 1"	22' 0"	18' 6"	22' 9"	20' 0"	16' 9"	20' 9"	18' 6"	15' 7"	18' 10"	17' 4"	14' 8"	17' 4"	16' 7"	14' 0"	16' 2"	15' 9"	13' 4"	14' 3"	14' 3"	12' 4"
		16	22' 9"	20' 0"	16' 9"	20' 1"	18' 1"	15' 3"	17' 10"	16' 9"	14' 2"	16' 2"	15' 9"	13' 4"	14' 10"	14' 10"	12' 8"	13' 9"	13' 9"	12' 1"	12' 2"	12' 2"	11' 3"
		24	18' 10"	17' 4"	14' 8"	16' 2"	15' 9"	13' 4"	14' 3"	14' 3"	12' 4"	12' 10"	12' 10"	11' 8"	11' 9"	11' 9"	11' 1"	11' 0"	11' 0"	10' 7"	9' 7"	9' 7"	9' 7"
362S162-97	50	12	27' 8"	24' 2"	20' 4"	25' 2"	22' 0"	18' 7"	23' 4"	20' 4"	17' 2"	22' 0"	19' 2"	16' 2"	20' 10"	18' 3"	15' 4"	19' 6"	17' 6"	14' 8"	17' 1"	16' 2"	13' 8"
		16	25' 2"	22' 0"	18' 7"	22' 10"	20' 0"	16' 10"	21' 3"	18' 7"	15' 8"	19' 6"	17' 6"	14' 8"	17' 9"	16' 7"	14' 0"	16' 4"	15' 10"	13' 4"	14' 2"	14' 2"	12' 4"
		24	22' 0"	19' 2"	16' 2"	19' 6"	17' 6"	14' 8"	17' 1"	16' 2"	13' 8"	15' 2"	15' 2"	12' 10"	13' 9"	13' 9"	12' 2"	12' 7"	12' 7"	11' 8"	10' 9"	10' 9"	10' 9"
362S162-118	50	12	29' 2"	25' 6"	21' 6"	26' 6"	23' 2"	19' 6"	24' 7"	21' 6"	18' 1"	23' 2"	20' 2"	17' 1"	22' 0"	19' 2"	16' 2"	20' 4"	18' 4"	15' 6"	17' 8"	17' 1"	14' 4"
		16	26' 6"	23' 2"	19' 6"	24' 1"	21' 0"	17' 9"	22' 4"	19' 6"	16' 6"	20' 4"	18' 4"	15' 6"	18' 6"	17' 6"	14' 8"	16' 10"	16' 8"	14' 1"	14' 6"	14' 6"	13' 1"
		24	23' 2"	20' 2"	17' 1"	20' 4"	18' 4"	15' 6"	17' 8"	17' 1"	14' 4"	15' 7"	15' 7"	13' 6"	14' 0"	14' 0"	12' 10"	12' 8"	12' 8"	12' 3"	10' 8"	10' 8"	10' 8"
362S200-33	33	12	15' 8"	15' 8"	15' 8"	13' 6"	13' 6"	13' 6"	12' 0"i	12' 0"i	12' 0"i	10' 10"i	10' 10"i	10' 10"i	10' 0"i	10' 0"i	10' 0"i	9' 3"i	9' 3"i	9' 3"i	8' 2"i	8' 2"i	8' 2"i
		16	13' 6"	13' 6"	13' 6"	11' 7"i	11' 7"i	11' 7"i	10' 3"i	10' 3"i	10' 3"i	9' 3"i	9' 3"i	9' 3"i	8' 6"i	8' 6"i	8' 6"i	7' 10"i	7' 10"i	7' 10"i	7' 0"a	7' 0"a	7' 0"a
		24	10' 10"i	10' 10"i	10' 10"i	9' 3"i	9' 3"i	9' 3"i	8' 2"i	8' 2"i	8' 2"i	7' 4"a	7' 4"a	7' 4"a	6' 9"a	6' 9"a	6' 9"a	6' 2"a	6' 2"a	6' 2"a	5' 4"a	5' 4"a	5' 4"a
362S200-43	33	12	19' 0"	19' 0"	17' 1"	16' 4"	16' 4"	15' 6"	14' 7"	14' 7"	14' 4"	13' 2"	13' 2"	13' 2"	12' 2"	12' 2"	12' 2"	11' 3"	11' 3"	11' 3"	10' 0"	10' 0"	10' 0"
		16	16' 4"	16' 4"	15' 6"	14' 1"	14' 1"	14' 1"	12' 6"	12' 6"	12' 6"	11' 3"	11' 3"	11' 3"	10' 4"	10' 4"	10' 4"	9' 7"	9' 7"	9' 7"	8' 6"i	8' 6"i	8' 6"i
		24	13' 2"	13' 2"	13' 2"	11' 3"	11' 3"	11' 3"	10' 0"	10' 0"	10' 0"	9' 0"i	9' 0"i	9' 0"i	8' 2"i	8' 2"i	8' 2"i	7' 7"i	7' 7"i	7' 7"i	6' 8"i	6' 8"i	6' 8"i
362S200-43	50	12	22' 0"	20' 2"	17' 1"	19' 0"	18' 4"	15' 6"	16' 10"	16' 10"	14' 4"	15' 3"	15' 3"	13' 6"	14' 1"	14' 1"	12' 10"	13' 1"	13' 1"	12' 3"	11' 7"	11' 7"	11' 4"
		16	19' 0"	18' 4"	15' 6"	16' 3"	16' 3"	14' 1"	14' 6"	14' 6"	13' 1"	13' 1"	13' 1"	12' 3"	12' 1"	12' 1"	11' 8"	11' 2"	11' 2"	11' 2"	9' 10"	9' 10"	9' 10"
		24	15' 3"	15' 3"	13' 6"	13' 1"	13' 1"	12' 3"	11' 7"	11' 7"	11' 4"	10' 6"	10' 6"	10' 6"	9' 7"	9' 7"	9' 7"	8' 10"	8' 10"	8' 10"	7' 9"	7' 9"	7' 9"
362S200-54	50	12	24' 9"	21' 8"	18' 3"	21' 8"	19' 8"	16' 7"	19' 3"	18' 3"	15' 4"	17' 7"	17' 2"	14' 6"	16' 2"	16' 2"	13' 9"	15' 1"	15' 1"	13' 2"	13' 3"	13' 3"	12' 2"
		16	21' 8"	19' 8"	16' 7"	18' 8"	17' 10"	15' 1"	16' 7"	16' 7"	14' 0"	15' 1"	15' 1"	13' 2"	13' 10"	13' 10"	12' 6"	12' 10"	12' 10"	12' 0"	11' 4"	11' 4"	11' 1"
		24	17' 7"	17' 2"	14' 6"	15' 1"	15' 1"	13' 2"	13' 3"	13' 3"	12' 2"	12' 1"	12' 1"	11' 6"	11' 1"	11' 1"	10' 10"	10' 3"	10' 3"	10' 3"	9' 0"	9' 0"	9' 0"

NOTE: See page 18 for Table Notes.

CURTAINWALL LIMITING HEIGHTS - DOUBLE SPAN

MEMBER	F_y (ksi)	SPACING (in.) o.c.	15 psf			20 psf			25 psf			30 psf			35 psf			40 psf			50 psf		
			L/240	L/360	L/600	L/240	L/360	L/600	L/240	L/360	L/600	L/240	L/360	L/600	L/240	L/360	L/600	L/240	L/360	L/600	L/240	L/360	L/600
362S200-68	50	12	26' 7"	23' 2"	19' 7"	24' 2"	21' 1"	17' 9"	22' 3"	19' 7"	16' 6"	20' 3"	18' 4"	15' 7"	18' 7"	17' 6"	14' 9"	17' 3"	16' 9"	14' 1"	15' 3"	15' 3"	13' 1"
		16	24' 2"	21' 1"	17' 9"	21' 7"	19' 2"	16' 2"	19' 1"	17' 9"	15' 0"	17' 3"	16' 9"	14' 1"	15' 10"	15' 10"	13' 4"	14' 8"	14' 8"	12' 9"	13' 0"	13' 0"	11' 10"
		24	20' 3"	18' 4"	15' 7"	17' 3"	16' 9"	14' 1"	15' 3"	15' 3"	13' 1"	13' 9"	13' 9"	12' 3"	12' 7"	12' 7"	11' 8"	11' 7"	11' 7"	11' 2"	10' 2"	10' 2"	10' 2"
362S200-97	50	12	29' 4"	25' 8"	21' 8"	26' 8"	23' 3"	19' 8"	24' 9"	21' 8"	18' 3"	23' 3"	20' 4"	17' 2"	22' 2"	19' 4"	16' 3"	20' 8"	18' 6"	15' 7"	18' 1"	17' 2"	14' 6"
		16	26' 8"	23' 3"	19' 8"	24' 3"	21' 2"	17' 10"	22' 6"	19' 8"	16' 7"	20' 8"	18' 6"	15' 7"	18' 10"	17' 7"	14' 9"	17' 3"	16' 9"	14' 2"	15' 0"	15' 0"	13' 2"
		24	23' 3"	20' 4"	17' 2"	20' 8"	18' 6"	15' 7"	18' 1"	17' 2"	14' 6"	16' 1"	16' 1"	13' 8"	14' 6"	14' 6"	13' 0"	13' 2"	13' 2"	12' 4"	11' 3"	11' 3"	11' 3"
362S200-118	50	12	31' 0"	27' 1"	22' 10"	28' 2"	24' 7"	20' 9"	26' 2"	22' 10"	19' 3"	24' 7"	21' 6"	18' 1"	23' 4"	20' 4"	17' 2"	21' 7"	19' 6"	16' 6"	18' 7"	18' 1"	15' 3"
		16	28' 2"	24' 7"	20' 9"	25' 7"	22' 4"	18' 10"	23' 9"	20' 9"	17' 6"	21' 7"	19' 6"	16' 6"	19' 6"	18' 7"	15' 8"	17' 9"	17' 9"	15' 0"	15' 1"	15' 1"	13' 10"
		24	24' 7"	21' 6"	18' 1"	21' 7"	19' 6"	16' 6"	18' 7"	18' 1"	15' 3"	16' 3"	16' 3"	14' 4"	14' 7"	14' 7"	13' 8"	13' 2"	13' 2"	13' 1"	11' 0"	11' 0"	11' 0"
362S250-33	33	12	16' 3"	16' 3"	16' 3"	14' 0"	14' 0"	14' 0"	12' 4"i	12' 4"i	12' 4"i	11' 3"i	11' 3"i	11' 3"i	10' 3"i	10' 3"i	10' 3"i	9' 7"i	9' 7"i	9' 7"i	8' 6"i	8' 6"i	8' 6"i
		16	14' 0"	14' 0"	14' 0"	12' 0"i	12' 0"i	12' 0"i	10' 7"i	10' 7"i	10' 7"i	9' 7"i	9' 7"i	9' 7"i	8' 9"i	8' 9"i	8' 9"i	8' 2"i	8' 2"i	8' 2"i	7' 2"a	7' 2"a	7' 2"a
		24	11' 3"i	11' 3"i	11' 3"i	9' 7"i	9' 7"i	9' 7"i	8' 6"i	8' 6"i	8' 6"i	7' 7"a	7' 7"a	7' 7"a	6' 10"a	6' 10"a	6' 10"a	6' 4"a	6' 4"a	6' 4"a	5' 7"a	5' 7"a	5' 7"a
362S250-43	33	12	19' 6"	19' 6"	18' 0"	16' 9"	16' 9"	16' 4"	14' 10"	14' 10"	14' 10"	13' 6"	13' 6"	13' 6"	12' 4"	12' 4"	12' 4"	11' 7"	11' 7"	11' 7"	10' 2"	10' 2"	10' 2"
		16	16' 9"	16' 9"	16' 4"	14' 4"	14' 4"	14' 4"	12' 9"	12' 9"	12' 9"	11' 7"	11' 7"	11' 7"	10' 7"	10' 7"	10' 7"	9' 9"i	9' 9"i	9' 9"i	8' 8"i	8' 8"i	8' 8"i
		24	13' 6"	13' 6"	13' 6"	11' 7"	11' 7"	11' 7"	10' 2"	10' 2"	10' 2"	9' 2"i	9' 2"i	9' 2"i	8' 4"i	8' 4"i	8' 4"i	7' 9"i	7' 9"i	7' 9"i	6' 9"i	6' 9"i	6' 9"i
362S250-43	50	12	22' 4"	21' 1"	17' 9"	19' 3"	19' 1"	16' 2"	17' 2"	17' 2"	15' 0"	15' 7"	15' 7"	14' 1"	14' 4"	14' 4"	13' 4"	13' 4"	13' 4"	12' 9"	11' 9"	11' 9"	11' 9"
		16	19' 3"	19' 1"	16' 2"	16' 7"	16' 7"	14' 8"	14' 8"	14' 8"	13' 7"	13' 4"	13' 4"	12' 9"	12' 3"	12' 3"	12' 2"	11' 4"	11' 4"	11' 4"	10' 1"	10' 1"	10' 1"
		24	15' 7"	15' 7"	14' 1"	13' 4"	13' 4"	12' 9"	11' 9"	11' 9"	11' 9"	10' 8"	10' 8"	10' 8"	9' 9"	9' 9"	9' 9"	9' 0"	9' 0"	9' 0"	7' 10"i	7' 10"i	7' 10"i
362S250-54	50	12	25' 9"	22' 9"	19' 2"	22' 2"	20' 8"	17' 6"	19' 9"	19' 2"	16' 2"	18' 0"	18' 0"	15' 3"	16' 7"	16' 7"	14' 6"	15' 4"	15' 4"	13' 10"	13' 7"	13' 7"	12' 10"
		16	22' 2"	20' 8"	17' 6"	19' 1"	18' 9"	15' 10"	17' 0"	17' 0"	14' 8"	15' 4"	15' 4"	13' 10"	14' 2"	14' 2"	13' 2"	13' 2"	13' 2"	12' 7"	11' 7"	11' 7"	11' 7"
		24	18' 0"	18' 0"	15' 3"	15' 4"	15' 4"	13' 10"	13' 7"	13' 7"	12' 10"	12' 3"	12' 3"	12' 1"	11' 3"	11' 3"	11' 3"	10' 6"	10' 6"	10' 6"	9' 2"	9' 2"	9' 2"
362S250-68	50	12	28' 1"	24' 6"	20' 8"	25' 6"	22' 3"	18' 9"	22' 8"	20' 8"	17' 6"	20' 7"	19' 6"	16' 4"	18' 10"	18' 6"	15' 7"	17' 7"	17' 7"	14' 10"	15' 6"	15' 6"	13' 10"
		16	25' 6"	22' 3"	18' 9"	21' 10"	20' 3"	17' 1"	19' 4"	18' 9"	15' 10"	17' 7"	17' 7"	14' 10"	16' 1"	16' 1"	14' 2"	15' 0"	15' 0"	13' 7"	13' 1"	13' 1"	12' 7"
		24	20' 7"	19' 6"	16' 4"	17' 7"	17' 7"	14' 10"	15' 6"	15' 6"	13' 10"	14' 0"	14' 0"	13' 0"	12' 9"	12' 9"	12' 4"	11' 9"	11' 9"	11' 9"	10' 3"	10' 3"	10' 3"
362S250-97	50	12	31' 1"	27' 2"	22' 10"	28' 3"	24' 8"	20' 9"	26' 2"	22' 10"	19' 3"	24' 8"	21' 7"	18' 2"	23' 3"	20' 6"	17' 3"	21' 6"	19' 7"	16' 6"	18' 8"	18' 2"	15' 3"
		16	28' 3"	24' 8"	20' 9"	25' 8"	22' 4"	18' 10"	23' 9"	20' 9"	17' 7"	21' 6"	19' 7"	16' 6"	19' 6"	18' 7"	15' 8"	17' 10"	17' 9"	15' 0"	15' 4"	15' 4"	13' 10"
		24	24' 8"	21' 7"	18' 2"	21' 6"	19' 7"	16' 6"	18' 8"	18' 2"	15' 3"	16' 7"	16' 7"	14' 4"	14' 10"	14' 10"	13' 8"	13' 7"	13' 7"	13' 1"	11' 6"	11' 6"	11' 6"
362S250-118	50	12	32' 10"	28' 8"	24' 2"	29' 10"	26' 1"	22' 0"	27' 8"	24' 2"	20' 4"	26' 1"	22' 9"	19' 2"	24' 6"	21' 7"	18' 3"	22' 6"	20' 8"	17' 6"	19' 2"	19' 2"	16' 2"
		16	29' 10"	26' 1"	22' 0"	27' 1"	23' 8"	20' 0"	25' 2"	22' 0"	18' 7"	22' 6"	20' 8"	17' 6"	20' 2"	19' 8"	16' 7"	18' 4"	18' 4"	15' 10"	15' 7"	15' 7"	14' 8"
		24	26' 1"	22' 9"	19' 2"	22' 6"	20' 8"	17' 6"	19' 2"	19' 2"	16' 2"	16' 10"	16' 10"	15' 3"	15' 0"	15' 0"	14' 6"	13' 6"	13' 6"	13' 6"	11' 3"	11' 3"	11' 3"
400S137-33	33	12	14' 10"	14' 10"	14' 10"	12' 9"	12' 9"	12' 9"	11' 4"	11' 4"	11' 4"	10' 4"i	10' 4"i	10' 4"i	9' 7"i	9' 7"i	9' 7"i	8' 10"i	8' 10"i	8' 10"i	7' 10"i	7' 10"i	7' 10"i
		16	12' 9"	12' 9"	12' 9"	11' 0"	11' 0"	11' 0"	9' 9"i	9' 9"i	9' 9"i	8' 10"i	8' 10"i	8' 10"i	8' 2"i	8' 2"i	8' 2"i	7' 7"i	7' 7"i	7' 7"i	6' 8"a	6' 8"a	6' 8"a
		24	10' 4"i	10' 4"i	10' 4"i	8' 10"i	8' 10"i	8' 10"i	7' 10"i	7' 10"i	7' 10"i	7' 1"i	7' 1"i	7' 1"i	6' 6"a	6' 6"a	6' 6"a	6' 1"a	6' 1"a	6' 1"a	5' 3"a	5' 3"a	5' 3"a
400S137-43	33	12	17' 7"	17' 7"	16' 7"	15' 2"	15' 2"	15' 1"	13' 6"	13' 6"	13' 6"	12' 3"	12' 3"	12' 3"	11' 3"	11' 3"	11' 3"	10' 7"	10' 7"	10' 7"	9' 4"	9' 4"	9' 4"
		16	15' 2"	15' 2"	15' 1"	13' 1"	13' 1"	13' 1"	11' 7"	11' 7"	11' 7"	10' 7"	10' 7"	10' 7"	9' 8"	9' 8"	9' 8"	9' 1"	9' 1"	9' 1"	8' 0"i	8' 0"i	8' 0"i
		24	12' 3"	12' 3"	12' 3"	10' 7"	10' 7"	10' 7"	9' 4"	9' 4"	9' 4"	8' 6"	8' 6"	8' 6"	7' 9"i	7' 9"i	7' 9"i	7' 3"i	7' 3"i	7' 3"i	6' 4"i	6' 4"i	6' 4"i
400S137-43	50	12	20' 3"	19' 8"	16' 7"	17' 7"	17' 7"	15' 1"	15' 8"	15' 8"	14' 0"	14' 4"	14' 4"	13' 2"	13' 3"	13' 3"	12' 7"	12' 4"	12' 4"	12' 0"	11' 0"	11' 0"	11' 0"
		16	17' 7"	17' 7"	15' 1"	15' 2"	15' 2"	13' 8"	13' 7"	13' 7"	12' 9"	12' 4"	12' 4"	12' 0"	11' 6"	11' 6"	11' 4"	10' 8"	10' 8"	10' 8"	9' 6"	9' 6"	9' 6"
		24	14' 4"	14' 4"	13' 2"	12' 4"	12' 4"	12' 0"	11' 0"	11' 0"	11' 0"	10' 0"	10' 0"	10' 0"	9' 2"	9' 2"	9' 2"	8' 7"	8' 7"	8' 7"	7' 7"	7' 7"	7' 7"
400S137-54	50	12	23' 6"	21' 1"	17' 9"	20' 3"	19' 2"	16' 2"	18' 2"	17' 9"	15' 0"	16' 7"	16' 7"	14' 2"	15' 3"	15' 3"	13' 4"	14' 3"	14' 3"	12' 10"	12' 8"	12' 8"	11' 10"
		16	20' 3"	19' 2"	16' 2"	17' 7"	17' 4"	14' 8"	15' 8"	15' 8"	13' 8"	14' 3"	14' 3"	12' 10"	13' 2"	13' 2"	12' 2"	12' 3"	12' 3"	11' 8"	10' 10"	10' 10"	10' 9"
		24	16' 7"	16' 7"	14' 2"	14' 3"	14' 3"	12' 10"	12' 8"	12' 8"	11' 10"	11' 6"	11' 6"	11' 2"	10' 7"	10' 7"	10' 7"	9' 10"	9' 10"	9' 10"	8' 8"	8' 8"	8' 8"
400S137-68	50	12	25' 10"	22' 7"	19' 1"	23' 3"	20' 6"	17' 3"	20' 9"	19' 1"	16' 1"	18' 10"	17' 10"	15' 1"	17' 6"	17' 0"	14' 4"	16' 3"	16' 3"	13' 8"	14' 6"	14' 6"	12' 9"
		16	23' 3"	20' 6"	17' 3"	20' 1"	18' 8"	15' 8"	17' 10"	17' 3"	14' 7"	16' 3"	16' 3"	13' 8"	15' 0"	15' 0"	13' 1"	14' 0"	14' 0"	12' 6"	12' 4"	12' 4"	11' 7"
		24	18' 10"	17' 10"	15' 1"	16' 3"	16' 3"	13' 8"	14' 6"	14' 6"	12' 9"	13' 1"	13' 1"	12' 0"	12' 1"	12' 1"	11' 4"	11' 3"	11' 3"	10' 10"	9' 10"	9' 10"	9' 10"
400S162-33	33	12	15' 10"	15' 10"	15' 10"	13' 8"	13' 8"	13' 8"	12' 2"i	12' 2"i	12' 2"i	11' 1"i	11' 1"i	11' 1"i	10' 2"i	10' 2"i	10' 2"i	9' 6"i	9' 6"i	9' 6"i	8' 4"i	8' 4"i	8' 4"i
		16	13' 8"	13' 8"	13' 8"	11' 9"i	11' 9"i	11' 9"i	10' 6"i	10' 6"i	10' 6"i	9' 6"i	9' 6"i	9' 6"i	8' 8"i	8' 8"i	8' 8"i	8' 1"i	8' 1"i	8' 1"i	7' 1"a	7' 1"a	7' 1"a
		24	11' 1"i	11' 1"i	11' 1"i	9' 6"i	9' 6"i	9' 6"i	8' 4"i	8' 4"i	8' 4"i	7' 7"a	7' 7"a	7' 7"a	7' 0"a	7' 0"a	7' 0"a	6' 4"a	6' 4"a	6' 4"a	5' 7"a	5' 7"a	5' 7"a
400S162-43	33	12	18' 10"	18' 10"	17' 4"	16' 3"	16' 3"	15' 9"	14' 6"	14' 6"	14' 6"	13' 2"	13' 2"	13' 2"	12' 2"	12' 2"	12' 2"	11' 3"	11' 3"	11' 3"	10' 1"	10' 1"	10' 1"
		16	16' 3"	16' 3"	15' 9"	14' 0"	14' 0"	14' 0"	12' 6"	12' 6"	12' 6"	11' 3"	11' 3"	11' 3"	10' 4"	10' 4"	10' 4"	9' 8"i	9' 8"i	9' 8"i	8' 7"i	8' 7"i	8' 7"i
		24	13' 2"	13' 2"	13' 2"	11' 3"	11' 3"	11' 3"	10' 1"	10' 1"	10' 1"	9' 1"i	9' 1"i	9' 1"i	8' 4"i	8' 4"i	8' 4"i	7' 9"i	7' 9"i	7' 9"i	6' 9"i	6' 9"i	6' 9"i
400S162-43	50	12	21' 7"	20' 8"	17' 4"	18' 8"	18' 8"	15' 9"	16' 7"	16' 7"	14' 8"	15' 1"	15' 1"	13' 9"	14' 0"	14' 0"	13' 1"	13' 0"	13' 0"	12' 7"	11' 7"	11' 7"	11' 7"
		16	18' 8"	18' 8"	15' 9"	16' 1"	16' 1"	14' 4"	14' 3"	14' 3"	13' 4"	13' 0"	13' 0"	12' 7"	12' 0"	12' 0"	11' 10"	11' 2"	11' 2"	11' 2"	9' 10"	9' 10"	9' 10"
		24	15' 1"	15' 1"	13' 9"	13' 0"	13' 0"	12' 7"	11' 7"	11' 7"	11' 7"	10' 6"	10' 6"	10' 6"	9' 7"	9' 7"	9' 7"	8' 10"	8' 10"	8' 10"	7' 10"i	7' 10"i	7' 10"i
400S162-54	50	12	25' 3"	22' 2"	18' 8"	21' 10"	20' 1"	17' 0"	19' 7"	18' 8"	15' 9"	17' 9"	17' 7"	14' 9"	16' 6"	16' 6"	14' 1"	15' 4"	15' 4"	13' 6"	13' 7"	13' 7"	12' 6"
		16	21' 10"	20' 1"	17' 0"	19' 0"	18' 3"	15' 4"	16' 10"	16' 10"	14' 3"	15' 4"	15' 4"	13' 6"	14' 2"	14' 2"	12' 9"	13' 2"	13' 2"	12' 2"	11' 8"	11' 8"	11' 4"
		24	17' 9"	17' 7"	14' 9"	15' 4"	15' 4"	13' 6"	13' 7"	13' 7"	12' 6"	12' 4"	12' 4"	11' 9"	11' 4"	11' 4"	11' 2"	10' 7"	10' 7"	10' 7"	9' 3"	9' 3"	9' 3"
400S162-68	50	12	27' 1"	23' 8"	20' 0"	24' 8"	21' 6"	18' 2"	22' 4"	20' 0"	16' 10"	20' 3"	18' 9"	15' 10"	18' 9"	17' 10"	15' 1"	17' 6"	17' 1"	14' 4"	15' 6"	15' 6"	13' 4"
		16	24' 8"	21' 6"	18' 2"	21' 7"	19' 7"	16' 6"	19' 3"	18' 2"	15' 3"	17' 6"	17' 1"	14' 4"	16' 1"	16' 1"	13' 8"	15' 0"	15' 0"	13' 1"	13' 3"	13' 3"	12' 2"
		24	20' 3"	18' 9"	15' 10"	17' 6"	17' 1"	14' 4"	15' 6"	15' 6"	13' 4"	14' 1"	14' 1"	12' 7"	13' 0"	13' 0"	12' 0"	12' 0"	12' 0"	11' 4"	10' 7"	10' 7"	10' 7"
400S162-97	50	12	30' 0"	26' 2"	22' 1"	27' 2"	23' 9"	20' 1"	25' 3"	22' 1"	18' 7"	23' 9"	20' 9"	17' 6"	22' 7"	19' 8"	16' 8"	21' 7"	18' 10"	15' 10"	19' 1"	17' 6"	14' 9"
		16	27' 2"	23' 9"	20' 1"	24' 8"	21' 7"	18' 2"	23' 0"	20' 1"	16' 10"	21' 7"	18' 10"	15' 10"	19' 10"	17' 10"	15' 1"	18' 4"	17' 2"	14' 6"	16' 2"	15' 10"	13' 4"
		24	23' 9"	20' 9"	17' 6"	21' 7"	18' 10"	15' 10"	19' 1"	17' 6"	14' 9"	17' 2"	16' 6"	13' 10"	15' 8"	15' 8"	13' 2"	14' 6"	14' 6"	12' 7"	12' 7"	12' 7"	11' 8"
400S162-118	50	12	31' 7"	27' 7"	23' 3"	28' 8"	25' 1"	21' 1"	26' 7"	23' 3"	19' 7"	25' 1"	21' 10"	18' 6"	23' 9"	20' 9"	17' 6"	22' 9"	19' 10"	16' 9"	20' 4"	18' 6"	15' 7"
		16	28' 8"	25' 1"	21' 1"	26' 1"	22' 9"	19' 2"	24' 2"	21' 1"	17' 9"	22' 9"	19' 10"	16' 9"	21' 2"	18' 10"	15' 10"	19' 7"	18' 1"	15' 2"	17' 1"	16' 9"	14' 2"
		24	25' 1"	21' 10"	18' 6"	22' 9"	19' 10"	16' 9"	20' 4"	18' 6"	15' 7"	18' 2"	17' 4"	14' 8"	16' 6"	16' 6"	13' 10"	15' 2"	15' 2"	13' 3"	13' 1"	13' 1"	12' 4"
400S200-33	33	12	16' 8"	16' 8"	16' 8"	14' 4"	14' 4"	14' 4"	12' 9"i	12' 9"i	12' 9"i	11' 7"i	11' 7"i	11' 7"i	10' 8"i	10' 8"i	10' 8"i	9' 10"i	9' 10"i	9' 10"i	8' 9"a	8' 9"a	8' 9"a
		16	14' 4"	14' 4"	14' 4"	12' 3"i	12' 3"i	12' 3"i	10' 10"i	10' 10"i	10' 10"i	9' 10"i	9' 10"i	9' 10"i	9' 1"i	9' 1"i	9' 1"i	8' 6"a	8' 6"a	8' 6"a	7' 4"a	7' 4"a	7' 4"a
		24	11' 7"i	11' 7"i	11' 7"i	9' 10"i	9' 10"i	9' 10"i	8' 9"a	8' 9"a	8' 9"a	7' 10"a	7' 10"a	7' 10"a	7' 2"a	7' 2"a	7' 2"a	6' 8"a	6' 8"a	6' 8"a	5' 9"a	5' 9"a	5' 9"a
400S200-43	33	12	20' 2"	20' 2"	18' 4"	17' 4"	17' 4"	16' 8"	15' 6"	15' 6"	15' 6"	14' 1"	14' 1"	14' 1"	13' 0"	13' 0"	13' 0"	12' 1"	12' 1"	12' 1"	10' 8"i	10' 8"i	10' 8"i
		16	17' 4"	17' 4"	16' 8"	15' 0"	15' 0"	15' 0"	13' 3"	13' 3"	13' 3"	12' 1"	12' 1"	12' 1"	11' 1"i	11' 1"i	11' 1"i	10' 3"i	10' 3"i	10' 3"i	9' 1"i	9' 1"i	9' 1"i
		24	14' 1"	14' 1"	14' 1"	12' 1"	12' 1"	12' 1"	10' 8"i	10' 8"i	10' 8"i	9' 8"i	9' 8"i	9' 8"i	8' 10"i	8' 10"i	8' 10"i	8' 2"i	8' 2"i	8' 2"i	7' 2"i	7' 2"i	7' 2"i

NOTE: See page 23 for Table Notes.

For more information, please contact Marino\WARE® Technical Services at 866.545.1545
This technical information reflects the most current information available and supersedes any and all
previous publications effective February 17, 2023 | MW-Cold Formed Catalog | © WARE Industries, Inc., 2023

CURTAINWALL LIMITING HEIGHTS - DOUBLE SPAN

MEMBER	F_y (ksi)	SPACING (in.) o.c.	15 psf			20 psf			25 psf			30 psf			35 psf			40 psf			50 psf		
			L/240	L/360	L/600	L/240	L/360	L/600	L/240	L/360	L/600	L/240	L/360	L/600	L/240	L/360	L/600	L/240	L/360	L/600	L/240	L/360	L/600
400S200-43	50	12	23' 4"	21' 9"	18' 4"	20' 2"	19' 9"	16' 8"	18' 0"	18' 0"	15' 6"	16' 3"	16' 3"	14' 7"	15' 1"	15' 1"	13' 10"	14' 0"	14' 0"	13' 3"	12' 4"	12' 4"	12' 3"
		16	20' 2"	19' 9"	16' 8"	17' 4"	17' 4"	15' 2"	15' 6"	15' 6"	14' 1"	14' 0"	14' 0"	13' 3"	12' 10"	12' 10"	12' 7"	12' 0"	12' 0"	12' 0"	10' 7"	10' 7"	10' 7"
		24	16' 3"	16' 3"	14' 7"	14' 0"	14' 0"	13' 3"	12' 4"	12' 4"	12' 3"	11' 3"	11' 3"	11' 3"	10' 3"	10' 3"	10' 3"	9' 7"	9' 7"	9' 7"	8' 4"i	8' 4"i	8' 4"i
400S200-54	50	12	26' 8"	23' 4"	19' 8"	23' 1"	21' 3"	17' 10"	20' 7"	19' 8"	16' 7"	18' 8"	18' 7"	15' 8"	17' 3"	17' 3"	14' 10"	16' 1"	16' 1"	14' 2"	14' 3"	14' 3"	13' 2"
		16	23' 1"	21' 3"	17' 10"	19' 10"	19' 3"	16' 3"	17' 8"	17' 8"	15' 1"	16' 1"	16' 1"	14' 2"	14' 9"	14' 9"	13' 6"	13' 9"	13' 9"	12' 10"	12' 2"	12' 2"	12' 0"
		24	18' 8"	18' 7"	15' 8"	16' 1"	16' 1"	14' 2"	14' 3"	14' 3"	13' 2"	12' 10"	12' 10"	12' 4"	11' 10"	11' 10"	11' 9"	11' 1"	11' 1"	11' 1"	9' 8"	9' 8"	9' 8"
400S200-68	50	12	28' 8"	25' 1"	21' 1"	26' 1"	22' 9"	19' 2"	24' 0"	21' 1"	17' 9"	21' 9"	19' 10"	16' 9"	20' 1"	18' 10"	15' 10"	18' 8"	18' 1"	15' 2"	16' 7"	16' 7"	14' 2"
		16	26' 1"	22' 9"	19' 2"	23' 2"	20' 8"	17' 6"	20' 7"	19' 2"	16' 2"	18' 8"	18' 1"	15' 2"	17' 3"	17' 2"	14' 6"	16' 1"	16' 1"	13' 10"	14' 2"	14' 2"	12' 10"
		24	21' 9"	19' 10"	16' 9"	18' 8"	18' 1"	15' 2"	16' 7"	16' 7"	14' 2"	15' 1"	15' 1"	13' 3"	13' 9"	13' 9"	12' 8"	12' 9"	12' 9"	12' 1"	11' 3"	11' 3"	11' 2"
400S200-97	50	12	31' 9"	27' 8"	23' 4"	28' 10"	25' 2"	21' 3"	26' 9"	23' 4"	19' 8"	25' 2"	22' 0"	18' 7"	23' 10"	20' 10"	17' 7"	22' 10"	20' 0"	16' 10"	20' 4"	18' 7"	15' 8"
		16	28' 10"	25' 2"	21' 3"	26' 2"	22' 10"	19' 3"	24' 3"	21' 3"	17' 10"	22' 10"	20' 0"	16' 10"	21' 2"	19' 0"	16' 0"	19' 7"	18' 2"	15' 3"	17' 2"	16' 10"	14' 2"
		24	25' 2"	22' 0"	18' 7"	22' 10"	20' 0"	16' 10"	20' 4"	18' 7"	15' 8"	18' 3"	17' 6"	14' 8"	16' 8"	16' 7"	14' 0"	15' 4"	15' 4"	13' 4"	13' 3"	13' 3"	12' 4"
400S200-118	50	12	33' 6"	29' 3"	24' 8"	30' 4"	26' 7"	22' 4"	28' 3"	24' 8"	20' 9"	26' 7"	23' 2"	19' 7"	25' 3"	22' 1"	18' 7"	24' 2"	21' 1"	17' 9"	21' 7"	19' 7"	16' 6"
		16	30' 4"	26' 7"	22' 4"	27' 8"	24' 2"	20' 4"	25' 8"	22' 4"	18' 10"	24' 2"	21' 1"	17' 9"	22' 6"	20' 1"	16' 10"	20' 9"	19' 2"	16' 2"	18' 0"	17' 9"	15' 0"
		24	26' 7"	23' 2"	19' 7"	24' 2"	21' 1"	17' 9"	21' 7"	19' 7"	16' 6"	19' 3"	18' 4"	15' 7"	17' 4"	17' 4"	14' 9"	16' 0"	16' 0"	14' 1"	13' 8"	13' 8"	13' 1"
400S250-33	33	12	17' 2"	17' 2"	17' 2"	14' 9"	14' 9"	14' 9"	13' 2"i	13' 2"i	13' 2"i	12' 0"i	12' 0"i	12' 0"i	11' 0"i	11' 0"i	11' 0"i	10' 2"i	10' 2"i	10' 2"i	9' 0"a	9' 0"a	9' 0"a
		16	14' 9"	14' 9"	14' 9"	12' 8"i	12' 8"i	12' 8"i	11' 3"i	11' 3"i	11' 3"i	10' 2"i	10' 2"i	10' 2"i	9' 4"a	9' 4"a	9' 4"a	8' 8"a	8' 8"a	8' 8"a	7' 8"a	7' 8"a	7' 8"a
		24	12' 0"i	12' 0"i	12' 0"i	10' 2"i	10' 2"i	10' 2"i	9' 0"a	9' 0"a	9' 0"a	8' 1"a	8' 1"a	8' 1"a	7' 4"a	7' 4"a	7' 4"a	6' 10"a	6' 10"a	6' 10"a	6' 0"a	6' 0"a	6' 0"a
400S250-43	33	12	20' 8"	20' 8"	19' 4"	17' 9"	17' 9"	17' 7"	15' 10"	15' 10"	15' 10"	14' 4"	14' 4"	14' 4"	13' 3"	13' 3"	13' 3"	12' 4"	12' 4"	12' 4"	11' 0"i	11' 0"i	11' 0"i
		16	17' 9"	17' 9"	17' 7"	15' 3"	15' 3"	15' 3"	13' 7"	13' 7"	13' 7"	12' 4"	12' 4"	12' 4"	11' 4"i	11' 4"i	11' 4"i	10' 7"i	10' 7"i	10' 7"i	9' 3"i	9' 3"i	9' 3"i
		24	14' 4"	14' 4"	14' 4"	12' 4"	12' 4"	12' 4"	11' 0"i	11' 0"i	11' 0"i	9' 10"i	9' 10"i	9' 10"i	9' 1"i	9' 1"i	9' 1"i	8' 4"i	8' 4"i	8' 4"i	7' 4"a	7' 4"a	7' 4"a
400S250-43	50	12	23' 9"	22' 8"	19' 1"	20' 6"	20' 6"	17' 4"	18' 3"	18' 3"	16' 1"	16' 7"	16' 7"	15' 2"	15' 3"	15' 3"	14' 4"	14' 3"	14' 3"	13' 9"	12' 7"	12' 7"	12' 7"
		16	20' 6"	20' 6"	17' 4"	17' 8"	17' 8"	15' 9"	15' 8"	15' 8"	14' 8"	14' 3"	14' 3"	13' 9"	13' 1"	13' 1"	13' 1"	12' 2"	12' 2"	12' 2"	10' 9"	10' 9"	10' 9"
		24	16' 7"	16' 7"	15' 2"	14' 3"	14' 3"	13' 9"	12' 7"	12' 7"	12' 7"	11' 4"	11' 4"	11' 4"	10' 6"	10' 6"	10' 6"	9' 8"	9' 8"	9' 8"	8' 7"i	8' 7"i	8' 7"i
400S250-54	50	12	27' 4"	24' 7"	20' 8"	23' 7"	22' 3"	18' 9"	21' 0"	20' 8"	17' 6"	19' 1"	19' 1"	16' 4"	17' 8"	17' 8"	15' 7"	16' 4"	16' 4"	14' 10"	14' 7"	14' 7"	13' 10"
		16	23' 7"	22' 3"	18' 9"	20' 3"	20' 3"	17' 1"	18' 1"	18' 1"	15' 10"	16' 4"	16' 4"	14' 10"	15' 2"	15' 2"	14' 2"	14' 1"	14' 1"	13' 7"	12' 6"	12' 6"	12' 6"
		24	19' 1"	19' 1"	16' 4"	16' 4"	16' 4"	14' 10"	14' 7"	14' 7"	13' 10"	13' 2"	13' 2"	13' 1"	12' 2"	12' 2"	12' 2"	11' 3"	11' 3"	11' 3"	9' 10"	9' 10"	9' 10"
400S250-68	50	12	30' 3"	26' 4"	22' 3"	27' 4"	24' 0"	20' 3"	24' 4"	22' 3"	18' 9"	22' 2"	21' 0"	17' 8"	20' 4"	19' 10"	16' 9"	19' 0"	19' 0"	16' 1"	16' 10"	16' 10"	14' 10"
		16	27' 4"	24' 0"	20' 3"	23' 7"	21' 9"	18' 4"	21' 0"	20' 3"	17' 1"	19' 0"	19' 0"	16' 1"	17' 6"	17' 6"	15' 3"	16' 3"	16' 3"	14' 7"	14' 4"	14' 4"	13' 7"
		24	22' 2"	21' 0"	17' 8"	19' 0"	19' 0"	16' 1"	16' 10"	16' 10"	14' 10"	15' 3"	15' 3"	14' 0"	14' 0"	14' 0"	13' 3"	13' 0"	13' 0"	12' 9"	11' 6"	11' 6"	11' 6"
400S250-97	50	12	33' 7"	29' 3"	24' 8"	30' 6"	26' 7"	22' 6"	28' 3"	24' 8"	20' 10"	26' 7"	23' 3"	19' 7"	25' 3"	22' 1"	18' 7"	24' 1"	21' 1"	17' 9"	21' 1"	19' 7"	16' 7"
		16	30' 6"	26' 7"	22' 6"	27' 8"	24' 2"	20' 4"	25' 8"	22' 6"	18' 10"	24' 1"	21' 1"	17' 9"	22' 0"	20' 1"	16' 10"	20' 4"	19' 2"	16' 2"	17' 9"	17' 9"	15' 0"
		24	26' 7"	23' 3"	19' 7"	24' 1"	21' 1"	17' 9"	21' 1"	19' 7"	16' 7"	19' 0"	18' 6"	15' 7"	17' 3"	17' 3"	14' 9"	15' 10"	15' 10"	14' 2"	13' 8"	13' 8"	13' 1"
400S250-118	50	12	35' 6"	31' 0"	26' 1"	32' 2"	28' 1"	23' 8"	29' 10"	26' 1"	22' 0"	28' 1"	24' 7"	20' 8"	26' 8"	23' 4"	19' 8"	25' 7"	22' 3"	18' 9"	22' 6"	20' 8"	17' 6"
		16	32' 2"	28' 1"	23' 8"	29' 3"	25' 7"	21' 7"	27' 2"	23' 8"	20' 0"	25' 7"	22' 3"	18' 9"	23' 6"	21' 2"	17' 10"	21' 7"	20' 3"	17' 1"	18' 8"	18' 8"	15' 10"
		24	28' 1"	24' 7"	20' 8"	25' 7"	22' 3"	18' 9"	22' 6"	20' 8"	17' 6"	20' 0"	19' 6"	16' 6"	18' 1"	18' 1"	15' 7"	16' 6"	16' 6"	15' 0"	14' 1"	14' 1"	13' 10"
600S137-33	33	12	18' 7"	18' 7"	18' 7"	16' 1"i	16' 1"i	16' 1"i	14' 4"i	14' 4"i	14' 4"i	13' 1"i	13' 1"i	13' 1"i	12' 2"a	12' 2"a	12' 2"a	11' 4"a	11' 4"a	11' 4"a	10' 2"a	10' 2"a	10' 2"a
		16	16' 1"i	16' 1"i	16' 1"i	13' 10"i	13' 10"i	13' 10"i	12' 6"a	12' 6"a	12' 6"a	11' 4"a	11' 4"a	11' 4"a	10' 6"a	10' 6"a	10' 6"a	9' 9"a	9' 9"a	9' 9"a	8' 7"a	8' 7"a	8' 7"a
		24	13' 1"i	13' 1"i	13' 1"i	11' 4"a	11' 4"a	11' 4"a	10' 2"a	10' 2"a	10' 2"a	9' 2"a	9' 2"a	9' 2"a	8' 4"a	8' 4"a	8' 4"a	7' 8"a	7' 8"a	7' 8"a	6' 8"a	6' 8"a	6' 8"a
600S137-43	33	12	22' 3"	22' 3"	22' 3"	19' 3"	19' 3"	19' 3"	17' 3"	17' 3"	17' 3"	15' 9"	15' 9"	15' 9"	14' 7"i	14' 7"i	14' 7"i	13' 7"i	13' 7"i	13' 7"i	12' 2"i	12' 2"i	12' 2"i
		16	19' 3"	19' 3"	19' 3"	16' 8"	16' 8"	16' 8"	14' 10"	14' 10"	14' 10"	13' 7"i	13' 7"i	13' 7"i	12' 7"i	12' 7"i	12' 7"i	11' 9"i	11' 9"i	11' 9"i	10' 7"a	10' 7"a	10' 7"a
		24	15' 9"	15' 9"	15' 9"	13' 7"i	13' 7"i	13' 7"i	12' 2"i	12' 2"i	12' 2"i	11' 1"i	11' 1"i	11' 1"i	10' 3"a	10' 3"a	10' 3"a	9' 7"a	9' 7"a	9' 7"a	8' 7"a	8' 7"a	8' 7"a
600S137-43	50	12	25' 4"	25' 4"	22' 10"	22' 0"	22' 0"	20' 9"	19' 8"	19' 8"	19' 3"	18' 0"	18' 0"	18' 0"	16' 8"	16' 8"	16' 8"	15' 7"	15' 7"	15' 7"	13' 10"	13' 10"	13' 10"
		16	22' 0"	22' 0"	20' 9"	19' 1"	19' 1"	18' 10"	17' 1"	17' 1"	17' 1"	15' 7"	15' 7"	15' 7"	14' 4"	14' 4"	14' 4"	13' 6"	13' 6"	13' 6"	12' 1"i	12' 1"i	12' 1"i
		24	18' 0"	18' 0"	18' 0"	15' 7"	15' 7"	15' 7"	13' 10"	13' 10"	13' 10"	12' 8"	12' 8"	12' 8"	11' 9"i	11' 9"i	11' 9"i	11' 0"i	11' 0"i	11' 0"i	9' 10"i	9' 10"i	9' 10"i
600S137-54	50	12	29' 8"	29' 2"	24' 7"	25' 8"	25' 8"	22' 4"	23' 0"	23' 0"	20' 9"	21' 0"	21' 0"	19' 7"	19' 6"	19' 6"	18' 7"	18' 2"	18' 2"	17' 9"	16' 3"	16' 3"	16' 3"
		16	25' 8"	25' 8"	22' 4"	22' 3"	22' 3"	20' 3"	19' 10"	19' 10"	18' 10"	18' 2"	18' 2"	17' 9"	16' 9"	16' 9"	16' 9"	15' 9"	15' 9"	15' 9"	14' 1"	14' 1"	14' 1"
		24	21' 0"	21' 0"	19' 7"	18' 2"	18' 2"	17' 9"	16' 3"	16' 3"	16' 3"	14' 10"	14' 10"	14' 10"	13' 9"	13' 9"	13' 9"	12' 10"	12' 10"	12' 10"	11' 6"	11' 6"	11' 6"
600S137-68	50	12	34' 7"	31' 3"	26' 4"	30' 0"	28' 4"	24' 0"	26' 9"	26' 4"	22' 3"	24' 6"	24' 6"	21' 0"	22' 8"	22' 8"	19' 10"	21' 2"	21' 2"	19' 0"	19' 0"	19' 0"	17' 8"
		16	30' 0"	28' 4"	24' 0"	26' 0"	25' 9"	21' 9"	23' 2"	23' 2"	20' 2"	21' 2"	21' 2"	19' 0"	19' 7"	19' 7"	18' 1"	18' 4"	18' 4"	17' 3"	16' 4"	16' 4"	16' 1"
		24	24' 6"	24' 6"	21' 0"	21' 2"	21' 2"	19' 0"	19' 0"	19' 0"	17' 8"	17' 3"	17' 3"	16' 7"	16' 0"	16' 0"	15' 9"	15' 0"	15' 0"	15' 0"	13' 4"	13' 4"	13' 4"
600S137-97	50	12	39' 7"	34' 7"	29' 2"	36' 0"	31' 6"	26' 6"	33' 2"	29' 2"	24' 7"	30' 3"	27' 6"	23' 2"	28' 1"	26' 1"	22' 0"	26' 3"	25' 0"	21' 1"	23' 6"	23' 2"	19' 6"
		16	36' 0"	31' 6"	26' 6"	32' 2"	28' 7"	24' 1"	28' 9"	26' 6"	22' 4"	26' 3"	25' 0"	21' 1"	24' 3"	23' 8"	20' 0"	22' 9"	22' 8"	19' 1"	20' 4"	20' 4"	17' 9"
		24	30' 3"	27' 6"	23' 2"	26' 3"	25' 0"	21' 1"	23' 6"	23' 2"	19' 6"	21' 6"	21' 6"	18' 4"	19' 10"	19' 10"	17' 6"	18' 7"	18' 7"	16' 8"	16' 7"	16' 7"	15' 6"
600S162-33	33	12	20' 1"i	20' 1"i	20' 1"i	17' 4"i	17' 4"i	17' 4"i	15' 7"i	15' 7"i	15' 7"i	14' 2"a	14' 2"a	14' 2"a	13' 2"a	13' 2"a	13' 2"a	12' 3"a	12' 3"a	12' 3"a	11' 0"a	11' 0"a	11' 0"a
		16	17' 4"i	17' 4"i	17' 4"i	15' 1"i	15' 1"i	15' 1"i	13' 6"a	13' 6"a	13' 6"a	12' 3"a	12' 3"a	12' 3"a	11' 4"a	11' 4"a	11' 4"a	10' 8"a	10' 8"a	10' 8"a	9' 6"a	9' 6"a	9' 6"a
		24	14' 2"a	14' 2"a	14' 2"a	12' 3"a	12' 3"a	12' 3"a	11' 0"a	11' 0"a	11' 0"a	10' 0"a	10' 0"a	10' 0"a	9' 2"a	9' 2"a	9' 2"a	8' 4"a	8' 4"a	8' 4"a	7' 3"a	7' 3"a	7' 3"a
600S162-43	33	12	24' 0"	24' 0"	24' 0"	20' 9"	20' 9"	20' 9"	18' 7"	18' 7"	18' 7"	17' 0"i	17' 0"i	17' 0"i	15' 8"i	15' 8"i	15' 8"i	14' 8"i	14' 8"i	14' 8"i	13' 2"i	13' 2"i	13' 2"i
		16	20' 9"	20' 9"	20' 9"	18' 0"	18' 0"	18' 0"	16' 1"i	16' 1"i	16' 1"i	14' 8"i	14' 8"i	14' 8"i	13' 7"i	13' 7"i	13' 7"i	12' 8"i	12' 8"i	12' 8"i	11' 4"a	11' 4"a	11' 4"a
		24	17' 0"i	17' 0"i	17' 0"i	14' 8"i	14' 8"i	14' 8"i	13' 2"i	13' 2"i	13' 2"i	12' 0"a	12' 0"a	12' 0"a	11' 1"a	11' 1"a	11' 1"a	10' 4"a	10' 4"a	10' 4"a	9' 3"a	9' 3"a	9' 3"a
600S162-43	50	12	27' 6"	27' 6"	24' 0"	23' 9"	23' 9"	21' 9"	21' 3"	21' 3"	20' 2"	19' 4"	19' 4"	19' 0"	18' 0"	18' 0"	18' 0"	16' 9"	16' 9"	16' 9"	15' 0"	15' 0"	15' 0"
		16	23' 9"	23' 9"	21' 9"	20' 7"	20' 7"	19' 9"	18' 4"	18' 4"	18' 4"	16' 9"	16' 9"	16' 9"	15' 7"	15' 7"	15' 7"	14' 7"i	14' 7"i	14' 7"i	13' 0"i	13' 0"i	13' 0"i
		24	19' 4"	19' 4"	19' 0"	16' 9"	16' 9"	16' 9"	15' 0"	15' 0"	15' 0"	13' 8"i	13' 8"i	13' 8"i	12' 8"i	12' 8"i	12' 8"i	11' 10"i	11' 10"i	11' 10"i	10' 7"a	10' 7"a	10' 7"a
600S162-54	50	12	32' 0"	30' 6"	25' 8"	27' 8"	27' 8"	23' 4"	24' 9"	24' 9"	21' 8"	22' 7"	22' 7"	20' 4"	20' 10"	20' 10"	19' 4"	19' 7"	19' 7"	18' 6"	17' 6"	17' 6"	17' 2"
		16	27' 8"	27' 8"	23' 4"	24' 0"	24' 0"	21' 2"	21' 6"	21' 6"	19' 8"	19' 7"	19' 7"	18' 6"	18' 1"	18' 1"	17' 7"	17' 0"	17' 0"	16' 9"	15' 2"	15' 2"	15' 2"
		24	22' 7"	22' 7"	20' 4"	19' 7"	19' 7"	18' 6"	17' 6"	17' 6"	17' 2"	16' 0"	16' 0"	16' 0"	14' 9"	14' 9"	14' 9"	13' 10"	13' 10"	13' 10"	12' 4"i	12' 4"i	12' 4"i
600S162-68	50	12	37' 2"	32' 8"	27' 7"	32' 2"	29' 8"	25' 0"	28' 9"	27' 7"	23' 3"	26' 3"	25' 10"	21' 10"	24' 3"	24' 3"	20' 9"	22' 9"	22' 9"	19' 10"	20' 4"	20' 4"	18' 6"
		16	32' 2"	29' 8"	25' 0"	27' 10"	27' 0"	22' 9"	24' 10"	24' 10"	21' 1"	22' 9"	22' 9"	19' 10"	21' 1"	21' 1"	18' 10"	19' 8"	19' 8"	18' 1"	17' 7"	17' 7"	16' 9"
		24	26' 3"	25' 10"	21' 10"	22' 9"	22' 9"	19' 10"	20' 4"	20' 4"	18' 6"	18' 7"	18' 7"	17' 4"	17' 2"	17' 2"	16' 6"	16' 1"	16' 1"	15' 9"	14' 4"	14' 4"	14' 4"
600S162-97	50	12	41' 6"	36' 2"	30' 7"	37' 8"	32' 10"	27' 9"	35' 0"	30' 7"	25' 9"	32' 6"	28' 9"	24' 3"	30' 1"	27' 3"	23' 0"	28' 1"	26' 1"	22' 0"	25' 2"	24' 3"	20' 6"
		16	37' 8"	32' 10"	27' 9"	34' 2"	29' 10"	25' 2"	30' 9"	27' 9"	23' 4"	28' 1"	26' 1"	22' 0"	26' 1"	24' 9"	20' 10"	24' 4"	23' 8"	20' 0"	21' 9"	21' 9"	18' 7"
		24	32' 6"	28' 9"	24' 3"	28' 1"	26' 1"	22' 0"	25' 2"	24' 3"	20' 6"	23' 0"	22' 9"	19' 2"	21' 3"	21' 3"	18' 3"	19' 10"	19' 10"	17' 6"	17' 9"	17' 9"	16' 2"

NOTE: See page 23 for Table Notes.

CURTAINWALL LIMITING HEIGHTS - DOUBLE SPAN

MEMBER	F_y (ksi)	SPACING (in.) o.c.	15 psf			20 psf			25 psf			30 psf			35 psf			40 psf			50 psf		
			L/240	L/360	L/600	L/240	L/360	L/600	L/240	L/360	L/600	L/240	L/360	L/600	L/240	L/360	L/600	L/240	L/360	L/600	L/240	L/360	L/600
600S162-118	50	12	43' 9"	38' 3"	32' 3"	39' 9"	34' 9"	29' 3"	36' 10"	32' 3"	27' 2"	34' 9"	30' 4"	25' 7"	33' 0"	28' 9"	24' 3"	31' 7"	27' 7"	23' 3"	29' 3"	25' 7"	21' 7"
		16	39' 9"	34' 9"	29' 3"	36' 2"	31' 7"	26' 7"	33' 7"	29' 3"	24' 8"	31' 7"	27' 7"	23' 3"	30' 0"	26' 2"	22' 1"	28' 8"	25' 1"	21' 1"	25' 8"	23' 3"	19' 7"
		24	34' 9"	30' 4"	25' 7"	31' 7"	27' 7"	23' 3"	29' 3"	25' 7"	21' 7"	27' 1"	24' 1"	20' 3"	25' 0"	22' 10"	19' 3"	23' 3"	21' 10"	18' 6"	20' 8"	20' 3"	17' 1"
600S200-33	33	12	21' 6"i	21' 6"i	21' 6"i	18' 7"i	18' 7"i	18' 7"i	16' 8"a	16' 8"a	16' 8"a	15' 2"a	15' 2"a	15' 2"a	14' 1"a	14' 1"a	14' 1"a	13' 2"a	13' 2"a	13' 2"a	11' 7"a	11' 7"a	11' 7"a
		16	18' 7"i	18' 7"i	18' 7"i	16' 1"a	16' 1"a	16' 1"a	14' 4"a	14' 4"a	14' 4"a	13' 2"a	13' 2"a	13' 2"a	12' 1"a	12' 1"a	12' 1"a	11' 2"a	11' 2"a	11' 2"a	9' 8"a	9' 8"a	9' 8"a
		24	15' 2"a	15' 2"a	15' 2"a	13' 2"a	13' 2"a	13' 2"a	11' 7"a	11' 7"a	11' 7"a	10' 4"a	10' 4"a	10' 4"a	9' 4"a	9' 4"a	9' 4"a	8' 8"a	8' 8"a	8' 8"a	7' 6"a	7' 6"a	7' 6"a
600S200-43	33	12	25' 8"	25' 8"	25' 2"	22' 3"	22' 3"	22' 3"	19' 10"	19' 10"	19' 10"	18' 2"i	18' 2"i	18' 2"i	16' 9"i	16' 9"i	16' 9"i	15' 8"i	15' 8"i	15' 8"i	14' 1"a	14' 1"a	14' 1"a
		16	22' 3"	22' 3"	22' 3"	19' 3"i	19' 3"i	19' 3"i	17' 2"i	17' 2"i	17' 2"i	15' 8"i	15' 8"i	15' 8"i	14' 7"i	14' 7"i	14' 7"i	13' 7"a	13' 7"a	13' 7"a	12' 2"a	12' 2"a	12' 2"a
		24	18' 2"i	18' 2"i	18' 2"i	15' 8"i	15' 8"i	15' 8"i	14' 1"a	14' 1"a	14' 1"a	12' 10"a	12' 10"a	12' 10"a	11' 10"a	11' 10"a	11' 10"a	11' 1"a	11' 1"a	11' 1"a	10' 0"a	10' 0"a	10' 0"a
600S200-43	50	12	29' 4"	29' 4"	25' 2"	25' 4"	25' 4"	22' 10"	22' 9"	22' 9"	21' 2"	20' 9"	20' 9"	20' 0"	19' 2"	19' 2"	19' 0"	18' 0"	18' 0"	18' 0"	16' 1"i	16' 1"i	16' 1"i
		16	25' 4"	25' 4"	22' 10"	22' 0"	22' 0"	20' 9"	19' 8"	19' 8"	19' 3"	18' 0"	18' 0"	18' 0"	16' 8"i	16' 8"i	16' 8"i	15' 7"i	15' 7"i	15' 7"i	13' 10"i	13' 10"i	13' 10"i
		24	20' 9"	20' 9"	20' 0"	18' 0"	18' 0"	18' 0"	16' 1"i	16' 1"i	16' 1"i	14' 8"i	14' 8"i	14' 8"i	13' 7"i	13' 7"i	13' 7"i	12' 8"i	12' 8"i	12' 8"i	11' 4"a	11' 4"a	11' 4"a
600S200-54	50	12	34' 2"	32' 0"	27' 0"	29' 7"	29' 1"	24' 7"	26' 6"	26' 6"	22' 9"	24' 2"	24' 2"	21' 4"	22' 4"	22' 4"	20' 4"	20' 10"	20' 10"	19' 6"	18' 8"	18' 8"	18' 1"
		16	29' 7"	29' 1"	24' 7"	25' 7"	25' 7"	22' 3"	22' 10"	22' 10"	20' 8"	20' 10"	20' 10"	19' 6"	19' 4"	19' 4"	18' 6"	18' 1"	18' 1"	17' 8"	16' 2"	16' 2"	16' 2"
		24	24' 2"	24' 2"	21' 4"	20' 10"	20' 10"	19' 6"	18' 8"	18' 8"	18' 1"	17' 1"	17' 1"	17' 0"	15' 9"	15' 9"	15' 9"	14' 9"i	14' 9"i	14' 9"i	13' 2"i	13' 2"i	13' 2"i
600S200-68	50	12	39' 4"	34' 4"	29' 0"	34' 4"	31' 2"	26' 3"	30' 9"	29' 0"	24' 6"	28' 1"	27' 3"	23' 0"	26' 0"	25' 10"	21' 10"	24' 3"	24' 3"	20' 10"	21' 8"	21' 8"	19' 4"
		16	34' 4"	31' 2"	26' 3"	29' 9"	28' 4"	23' 10"	26' 7"	26' 3"	22' 2"	24' 3"	24' 3"	20' 10"	22' 6"	22' 6"	19' 10"	21' 1"	21' 1"	19' 0"	18' 9"	18' 9"	17' 7"
		24	28' 1"	27' 3"	23' 0"	24' 3"	24' 3"	20' 10"	21' 8"	21' 8"	19' 4"	19' 9"	19' 9"	18' 3"	18' 4"	18' 4"	17' 4"	17' 2"	17' 2"	16' 7"	15' 4"	15' 4"	15' 4"
600S200-97	50	12	43' 8"	38' 2"	32' 2"	39' 8"	34' 8"	29' 3"	36' 10"	32' 2"	27' 2"	34' 8"	30' 3"	25' 7"	32' 4"	28' 9"	24' 3"	30' 3"	27' 6"	23' 2"	27' 1"	25' 7"	21' 7"
		16	39' 8"	34' 8"	29' 3"	36' 1"	31' 6"	26' 7"	33' 2"	29' 3"	24' 8"	30' 3"	27' 6"	23' 2"	28' 0"	26' 1"	22' 1"	26' 2"	25' 0"	21' 1"	23' 4"	23' 2"	19' 7"
		24	34' 8"	30' 3"	25' 7"	30' 3"	27' 6"	23' 2"	27' 1"	25' 7"	21' 7"	24' 8"	24' 0"	20' 3"	22' 10"	22' 9"	19' 3"	21' 4"	21' 4"	18' 4"	19' 1"	19' 1"	17' 1"
600S200-118	50	12	46' 2"	40' 4"	34' 1"	42' 0"	36' 8"	30' 10"	39' 0"	34' 1"	28' 8"	36' 8"	32' 0"	27' 0"	34' 9"	30' 4"	25' 8"	33' 3"	29' 1"	24' 7"	30' 10"	27' 0"	22' 9"
		16	42' 0"	36' 8"	30' 10"	38' 2"	33' 3"	28' 1"	35' 4"	30' 10"	26' 1"	33' 3"	29' 1"	24' 7"	31' 8"	27' 8"	23' 3"	30' 3"	26' 6"	22' 3"	27' 3"	24' 7"	20' 8"
		24	36' 8"	32' 0"	27' 0"	33' 3"	29' 1"	24' 7"	30' 10"	27' 0"	22' 9"	28' 9"	25' 4"	21' 6"	26' 7"	24' 2"	20' 4"	24' 9"	23' 1"	19' 6"	22' 0"	21' 6"	18' 1"
600S250-43	33	12	26' 4"	26' 4"	26' 4"	22' 10"	22' 10"	22' 10"	20' 4"i	20' 4"i	20' 4"i	18' 8"i	18' 8"i	18' 8"i	17' 3"i	17' 3"i	17' 3"i	16' 2"i	16' 2"i	16' 2"i	14' 6"a	14' 6"a	14' 6"a
		16	22' 10"	22' 10"	22' 10"	19' 9"i	19' 9"i	19' 9"i	17' 8"i	17' 8"i	17' 8"i	16' 2"i	16' 2"i	16' 2"i	15' 0"a	15' 0"a	15' 0"a	14' 0"a	14' 0"a	14' 0"a	12' 6"a	12' 6"a	12' 6"a
		24	18' 8"i	18' 8"i	18' 8"i	16' 2"i	16' 2"i	16' 2"i	14' 6"a	14' 6"a	14' 6"a	13' 2"a	13' 2"a	13' 2"a	12' 2"a	12' 2"a	12' 2"a	11' 4"a	11' 4"a	11' 4"a	10' 2"a	10' 2"a	10' 2"a
600S250-43	50	12	30' 0"	30' 0"	26' 1"	26' 0"	26' 0"	23' 8"	23' 3"	23' 3"	22' 0"	21' 2"	21' 2"	20' 8"	19' 8"	19' 8"	19' 8"	18' 4"	18' 4"	18' 4"	16' 6"i	16' 6"i	16' 6"i
		16	26' 0"	26' 0"	23' 8"	22' 6"	22' 6"	21' 6"	20' 2"	20' 2"	20' 0"	18' 4"	18' 4"	18' 4"	17' 0"i	17' 0"i	17' 0"i	15' 10"i	15' 10"i	15' 10"i	14' 2"i	14' 2"i	14' 2"i
		24	21' 2"	21' 2"	20' 8"	18' 4"	18' 4"	18' 4"	16' 6"i	16' 6"i	16' 6"i	15' 0"i	15' 0"i	15' 0"i	13' 10"i	13' 10"i	13' 10"i	13' 0"i	13' 0"i	13' 0"i	11' 6"a	11' 6"a	11' 6"a
600S250-54	50	12	35' 0"	33' 4"	28' 2"	30' 3"	30' 3"	25' 7"	27' 1"	27' 1"	23' 9"	24' 9"	24' 9"	22' 4"	22' 10"	22' 10"	21' 3"	21' 6"	21' 6"	20' 3"	19' 2"	19' 2"	18' 10"
		16	30' 3"	30' 3"	25' 7"	26' 3"	26' 3"	23' 3"	23' 6"	23' 6"	21' 7"	21' 6"	21' 6"	20' 3"	19' 10"	19' 10"	19' 3"	18' 7"	18' 7"	18' 6"	16' 7"	16' 7"	16' 7"
		24	24' 9"	24' 9"	22' 4"	21' 6"	21' 6"	20' 3"	19' 2"	19' 2"	18' 10"	17' 6"	17' 6"	17' 6"	16' 2"	16' 2"	16' 2"	15' 2"i	15' 2"i	15' 2"i	13' 7"i	13' 7"i	13' 7"i
600S250-68	50	12	40' 9"	36' 0"	30' 4"	35' 4"	32' 9"	27' 7"	31' 7"	30' 4"	25' 7"	28' 10"	28' 7"	24' 1"	26' 8"	26' 8"	22' 10"	25' 0"	25' 0"	21' 10"	22' 4"	22' 4"	20' 4"
		16	35' 4"	32' 9"	27' 7"	30' 7"	29' 9"	25' 1"	27' 4"	27' 4"	23' 3"	25' 0"	25' 0"	21' 10"	23' 1"	23' 1"	20' 9"	21' 8"	21' 8"	19' 10"	19' 4"	19' 4"	18' 6"
		24	28' 10"	28' 7"	24' 1"	25' 0"	25' 0"	21' 10"	22' 4"	22' 4"	20' 4"	20' 4"	20' 4"	19' 2"	18' 10"	18' 10"	18' 2"	17' 8"	17' 8"	17' 4"	15' 9"	15' 9"	15' 9"
600S250-97	50	12	45' 10"	40' 1"	33' 9"	41' 8"	36' 4"	30' 8"	38' 8"	33' 9"	28' 6"	36' 2"	31' 9"	26' 9"	33' 6"	30' 2"	25' 6"	31' 4"	28' 10"	24' 4"	28' 1"	26' 9"	22' 7"
		16	41' 8"	36' 4"	30' 8"	37' 10"	33' 1"	27' 10"	34' 4"	30' 8"	25' 10"	31' 4"	28' 10"	24' 4"	29' 0"	27' 6"	23' 2"	27' 2"	26' 3"	22' 1"	24' 3"	24' 3"	20' 7"
		24	36' 2"	31' 9"	26' 9"	31' 4"	28' 10"	24' 4"	28' 1"	26' 9"	22' 7"	25' 7"	25' 2"	21' 3"	23' 8"	23' 8"	20' 2"	22' 2"	22' 2"	19' 3"	19' 9"	19' 9"	18' 0"
600S250-118	50	12	48' 7"	42' 4"	35' 9"	44' 1"	38' 7"	32' 6"	41' 0"	35' 9"	30' 2"	38' 7"	33' 8"	28' 4"	36' 7"	32' 0"	27' 0"	35' 0"	30' 7"	25' 9"	31' 8"	28' 4"	24' 0"
		16	44' 1"	38' 7"	32' 6"	40' 1"	35' 0"	29' 6"	37' 2"	32' 6"	27' 4"	35' 0"	30' 7"	25' 9"	32' 9"	29' 1"	24' 6"	30' 8"	27' 9"	23' 6"	27' 4"	25' 9"	21' 9"
		24	38' 7"	33' 8"	28' 4"	35' 0"	30' 7"	25' 9"	31' 8"	28' 4"	24' 0"	28' 10"	26' 8"	22' 6"	26' 9"	25' 4"	21' 4"	25' 0"	24' 3"	20' 6"	22' 4"	22' 4"	19' 0"
600S300-54	50	12	35' 7"	34' 2"	28' 9"	30' 10"	30' 10"	26' 2"	27' 7"	27' 7"	24' 3"	25' 2"	25' 2"	22' 10"	23' 3"	23' 3"	21' 8"	21' 9"	21' 9"	20' 9"	19' 6"	19' 6"	19' 3"
		16	30' 10"	30' 10"	26' 2"	26' 8"	26' 8"	23' 9"	23' 10"	23' 10"	22' 1"	21' 9"	21' 9"	20' 9"	20' 2"	20' 2"	19' 9"	18' 10"	18' 10"	18' 10"	16' 10"	16' 10"	16' 10"
		24	25' 2"	25' 2"	22' 10"	21' 9"	21' 9"	20' 9"	19' 6"	19' 6"	19' 3"	17' 9"	17' 9"	17' 9"	16' 6"	16' 6"	16' 6"	15' 4"i	15' 4"i	15' 4"i	13' 10"i	13' 10"i	13' 10"i
600S300-68	50	12	41' 7"	37' 3"	31' 4"	36' 0"	33' 10"	28' 7"	32' 2"	31' 4"	26' 6"	29' 4"	29' 4"	25' 0"	27' 2"	27' 2"	23' 8"	25' 6"	25' 6"	22' 8"	22' 9"	22' 9"	21' 0"
		16	36' 0"	33' 10"	28' 7"	31' 2"	30' 9"	26' 0"	27' 10"	27' 10"	24' 1"	25' 6"	25' 6"	22' 8"	23' 7"	23' 7"	21' 6"	22' 1"	22' 1"	20' 7"	19' 8"	19' 8"	19' 1"
		24	29' 4"	29' 4"	25' 0"	25' 6"	25' 6"	22' 8"	22' 9"	22' 9"	21' 0"	20' 9"	20' 9"	19' 9"	19' 3"	19' 3"	18' 9"	18' 0"	18' 0"	18' 0"	16' 1"	16' 1"	16' 1"
600S300-97	50	12	47' 9"	41' 9"	35' 2"	43' 4"	37' 10"	32' 0"	40' 3"	35' 2"	29' 8"	37' 1"	33' 1"	28' 0"	34' 4"	31' 6"	26' 7"	32' 1"	30' 1"	25' 4"	28' 9"	28' 0"	23' 7"
		16	43' 4"	37' 10"	32' 0"	39' 4"	34' 6"	29' 1"	35' 2"	32' 0"	27' 0"	32' 1"	30' 1"	25' 4"	29' 9"	28' 7"	24' 1"	27' 9"	27' 4"	23' 1"	24' 10"	24' 10"	21' 4"
		24	37' 1"	33' 1"	28' 0"	32' 1"	30' 1"	25' 4"	28' 9"	28' 0"	23' 7"	26' 2"	26' 2"	22' 2"	24' 3"	24' 3"	21' 1"	22' 8"	22' 8"	20' 2"	20' 3"	20' 3"	18' 8"
600S300-118	50	12	50' 8"	44' 3"	37' 4"	46' 1"	40' 3"	34' 0"	42' 9"	37' 4"	31' 6"	40' 3"	35' 2"	29' 8"	38' 3"	33' 4"	28' 2"	36' 6"	32' 0"	27' 0"	32' 7"	29' 8"	25' 0"
		16	46' 1"	40' 3"	34' 0"	41' 10"	36' 7"	30' 10"	38' 10"	34' 0"	28' 7"	36' 6"	32' 0"	27' 0"	33' 9"	30' 4"	25' 7"	31' 7"	29' 0"	24' 6"	28' 2"	27' 0"	22' 8"
		24	40' 3"	35' 2"	29' 8"	36' 6"	32' 0"	27' 0"	32' 7"	29' 8"	25' 0"	29' 9"	27' 10"	23' 6"	27' 7"	26' 6"	22' 4"	25' 9"	25' 4"	21' 4"	23' 1"	23' 1"	19' 10"
800S137-33	33	12	21' 3"a	21' 3"a	21' 3"a	18' 6"a	18' 6"a	18' 6"a	16' 6"a	16' 6"a	16' 6"a	14' 10"a	14' 10"a	14' 10"a	13' 6"a	13' 6"a	13' 6"a	12' 4"a	12' 4"a	12' 4"a	10' 9"a	10' 9"a	10' 9"a
		16	18' 6"a	18' 6"a	18' 6"a	16' 0"a	16' 0"a	16' 0"a	13' 10"a	13' 10"a	13' 10"a	12' 4"a	12' 4"a	12' 4"a	11' 3"a	11' 3"a	11' 3"a	10' 3"a	10' 3"a	10' 3"a	8' 9"a	8' 9"a	8' 9"a
		24	14' 10"a	14' 10"a	14' 10"a	12' 4"a	12' 4"a	12' 4"a	10' 9"a	10' 9"a	10' 9"a	9' 6"a	9' 6"a	9' 6"a	8' 6"a	8' 6"a	8' 6"a	7' 8"a	7' 8"a	7' 8"a	6' 6"a	6' 6"a	6' 6"a
800S137-43	33	12	25' 9"	25' 9"	25' 9"	22' 4"	22' 4"	22' 4"	20' 0"i	20' 0"i	20' 0"i	18' 3"i	18' 3"i	18' 3"i	16' 10"i	16' 10"i	16' 10"i	15' 9"i	15' 9"i	15' 9"i	14' 1"a	14' 1"a	14' 1"a
		16	22' 4"	22' 4"	22' 4"	19' 4"i	19' 4"i	19' 4"i	17' 3"i	17' 3"i	17' 3"i	15' 9"i	15' 9"i	15' 9"i	14' 7"a	14' 7"a	14' 7"a	13' 8"a	13' 8"a	13' 8"a	12' 2"a	12' 2"a	2' 2"a
		24	18' 3"i	18' 3"i	18' 3"i	15' 9"i	15' 9"i	15' 9"i	14' 1"a	14' 1"a	14' 1"a	12' 10"a	12' 10"a	12' 10"a	12' 0"a	12' 0"a	12' 0"a	11' 2"a	11' 2"a	11' 2"a	9' 9"a	9' 9"a	9' 9"a
800S137-43	50	12	29' 3"	29' 3"	28' 6"	25' 4"	25' 4"	25' 4"	22' 8"	22' 8"	22' 8"	20' 8"	20' 8"	20' 8"	19' 2"	19' 2"	19' 2"	18' 0"	18' 0"	18' 0"	16' 1"i	16' 1"i	16' 1"i
		16	25' 4"	25' 4"	25' 4"	22' 0"	22' 0"	22' 0"	19' 8"	19' 8"	19' 8"	18' 0"	18' 0"	18' 0"	16' 7"i	16' 7"i	16' 7"i	15' 6"i	15' 6"i	15' 6"i	13' 10"i	13' 10"i	13' 10"i
		24	20' 8"	20' 8"	20' 8"	18' 0"	18' 0"	18' 0"	16' 1"i	16' 1"i	16' 1"i	14' 8"i	14' 8"i	14' 8"i	13' 7"i	13' 7"i	13' 7"i	12' 7"a	12' 7"a	12' 7"a	11' 0"a	11' 0"a	11' 0"a
800S137-54	50	12	34' 6"	34' 6"	30' 10"	29' 10"	29' 10"	28' 1"	26' 8"	26' 8"	26' 1"	24' 4"	24' 4"	24' 4"	22' 7"	22' 7"	22' 7"	21' 1"	21' 1"	21' 1"	18' 10"	18' 10"	18' 10"
		16	29' 10"	29' 10"	28' 1"	25' 10"	25' 10"	25' 6"	23' 2"	23' 2"	23' 2"	21' 1"	21' 1"	21' 1"	19' 7"	19' 7"	19' 7"	18' 3"	18' 3"	18' 3"	16' 4"	16' 4"	16' 4"
		24	24' 4"	24' 4"	24' 4"	21' 1"	21' 1"	21' 1"	18' 10"	18' 10"	18' 10"	17' 3"	17' 3"	17' 3"	16' 0"	16' 0"	16' 0"	14' 10"i	14' 10"i	14' 10"i	13' 4"i	13' 4"i	13' 4"i
800S137-68	50	12	40' 7"	39' 8"	33' 6"	35' 2"	35' 2"	30' 4"	31' 4"	31' 4"	28' 2"	28' 8"	28' 8"	26' 7"	26' 7"	26' 7"	25' 2"	24' 10"	24' 10"	24' 1"	22' 2"	22' 2"	22' 2"
		16	35' 2"	35' 2"	30' 4"	30' 4"	30' 4"	27' 7"	27' 2"	27' 2"	25' 7"	24' 10"	24' 10"	24' 1"	23' 0"	23' 0"	22' 10"	21' 6"	21' 6"	21' 6"	19' 3"	19' 3"	19' 3"
		24	28' 8"	28' 8"	26' 7"	24' 10"	24' 10"	24' 1"	22' 2"	22' 2"	22' 2"	20' 3"	20' 3"	20' 3"	18' 9"	18' 9"	18' 9"	17' 7"	17' 7"	17' 7"	15' 8"	15' 8"	15' 8"

NOTE: See page 23 for Table Notes.

For more information, please contact Marino\WARE® Technical Services at 866.545.1545
This technical information reflects the most current information available and supersedes any and all
previous publications effective February 17, 2023 | MW-Cold Formed Catalog | © WARE Industries, Inc., 2023

CURTAINWALL LIMITING HEIGHTS - DOUBLE SPAN

MEMBER	F_y (ksi)	SPACING (in.) o.c.	15 psf			20 psf			25 psf			30 psf			35 psf			40 psf			50 psf		
			L/240	L/360	L/600	L/240	L/360	L/600	L/240	L/360	L/600	L/240	L/360	L/600	L/240	L/360	L/600	L/240	L/360	L/600	L/240	L/360	L/600
800S137-97	50	12	50' 4"	44' 0"	37' 1"	44' 7"	40' 0"	33' 8"	39' 10"	37' 1"	31' 3"	36' 4"	34' 10"	29' 6"	33' 8"	33' 2"	28' 0"	31' 7"	31' 7"	26' 9"	28' 2"	28' 2"	24' 9"
		16	44' 7"	40' 0"	33' 8"	38' 7"	36' 3"	30' 7"	34' 7"	33' 8"	28' 4"	31' 7"	31' 7"	26' 9"	29' 2"	29' 2"	25' 4"	27' 3"	27' 3"	24' 3"	24' 4"	24' 4"	22' 7"
		24	36' 4"	34' 10"	29' 6"	31' 7"	31' 7"	26' 9"	28' 2"	28' 2"	24' 9"	25' 9"	25' 9"	23' 4"	23' 10"	23' 10"	22' 2"	22' 3"	22' 3"	21' 2"	20' 0"	20' 0"	19' 8"
800S162-33	33	12	23' 3"a	23' 3"a	23' 3"a	19' 10"a	19' 10"a	19' 10"a	17' 6"a	17' 6"a	17' 6"a	15' 7"a	15' 7"a	15' 7"a	14' 2"a	14' 2"a	14' 2"a	13' 0"a	13' 0"a	13' 0"a	11' 2"a	11' 2"a	11' 2"a
		16	19' 10"a	19' 10"a	19' 10"a	16' 9"a	16' 9"a	16' 9"a	14' 7"a	14' 7"a	14' 7"a	13' 0"a	13' 0"a	13' 0"a	11' 9"a	11' 9"a	11' 9"a	10' 8"a	10' 8"a	10' 8"a	9' 1"a	9' 1"a	9' 1"a
		24	15' 7"a	15' 7"a	15' 7"a	13' 0"a	13' 0"a	13' 0"a	11' 2"a	11' 2"a	11' 2"a	9' 10"a	9' 10"a	9' 10"a	8' 9"a	8' 9"a	8' 9"a	8' 0"a	8' 0"a	8' 0"a	6' 8"a	6' 8"a	6' 8"a
800S162-43	33	12	28' 0"	28' 0"	28' 0"	24' 2"	24' 2"	24' 2"	21' 8"i	21' 8"i	21' 8"i	19' 9"i	19' 9"i	19' 9"i	18' 3"i	18' 3"i	18' 3"i	17' 1"a	17' 1"a	17' 1"a	15' 3"a	15' 3"a	15' 3"a
		16	24' 2"	24' 2"	24' 2"	21' 0"i	21' 0"i	21' 0"i	18' 9"i	18' 9"i	18' 9"i	17' 1"a	17' 1"a	17' 1"a	15' 10"a	15' 10"a	15' 10"a	14' 9"a	14' 9"a	14' 9"a	13' 1"a	13' 1"a	13' 1"a
		24	19' 9"i	19' 9"i	19' 9"i	17' 1"a	17' 1"a	17' 1"a	15' 3"a	15' 3"a	15' 3"a	13' 10"a	13' 10"a	13' 10"a	12' 9"a	12' 9"a	12' 9"a	11' 9"a	11' 9"a	11' 9"a	10' 3"a	10' 3"a	10' 3"a
800S162-43	50	12	31' 9"	31' 9"	29' 8"	27' 7"	27' 7"	27' 0"	24' 8"	24' 8"	24' 8"	22' 6"	22' 6"	22' 6"	20' 10"	20' 10"	20' 10"	19' 6"i	19' 6"i	19' 6"i	17' 2"i	17' 2"i	17' 2"i
		16	27' 7"	27' 7"	27' 0"	23' 10"	23' 10"	23' 10"	21' 4"	21' 4"	21' 4"	19' 6"i	19' 6"i	19' 6"i	17' 10"i	17' 10"i	17' 10"i	16' 7"i	16' 7"i	16' 7"i	14' 7"i	14' 7"i	14' 7"i
		24	22' 6"	22' 6"	22' 6"	19' 6"i	19' 6"i	19' 6"i	17' 2"i	17' 2"i	17' 2"i	15' 6"i	15' 6"i	15' 6"i	14' 1"i	14' 1"i	14' 1"i	13' 0"a	13' 0"a	13' 0"a	11' 3"a	11' 3"a	11' 3"a
800S162-54	50	12	37' 3"	37' 3"	32' 2"	32' 3"	32' 3"	29' 2"	28' 10"	28' 10"	27' 2"	26' 4"	26' 4"	25' 7"	24' 4"	24' 4"	24' 3"	22' 10"	22' 10"	22' 10"	20' 4"	20' 4"	20' 4"
		16	32' 3"	32' 3"	29' 2"	28' 0"	28' 0"	26' 7"	25' 0"	25' 0"	24' 8"	22' 10"	22' 10"	22' 10"	21' 2"	21' 2"	21' 2"	19' 9"	19' 9"	19' 9"	17' 8"i	17' 8"i	17' 8"i
		24	26' 4"	26' 4"	25' 7"	22' 10"	22' 10"	22' 10"	20' 4"	20' 4"	20' 4"	18' 8"	18' 8"	18' 8"	17' 3"i	17' 3"i	17' 3"i	16' 2"i	16' 2"i	16' 2"i	14' 6"i	14' 6"i	14' 6"i
800S162-68	50	12	43' 8"	41' 3"	34' 9"	37' 9"	37' 6"	31' 7"	33' 9"	33' 9"	29' 4"	30' 10"	30' 10"	27' 7"	28' 7"	28' 7"	26' 2"	26' 9"	26' 9"	25' 1"	23' 10"	23' 10"	23' 3"
		16	37' 9"	37' 6"	31' 7"	32' 9"	32' 9"	28' 8"	29' 3"	29' 3"	26' 8"	26' 9"	26' 9"	25' 1"	24' 9"	24' 9"	23' 9"	23' 2"	23' 2"	22' 9"	20' 8"	20' 8"	20' 8"
		24	30' 10"	30' 10"	27' 7"	26' 9"	26' 9"	25' 1"	23' 10"	23' 10"	23' 3"	21' 9"	21' 9"	21' 9"	20' 2"	20' 2"	20' 2"	18' 10"	18' 10"	18' 10"	16' 10"	16' 10"	16' 10"
800S162-97	50	12	52' 6"	45' 9"	38' 8"	47' 8"	41' 7"	35' 1"	42' 8"	38' 8"	32' 7"	39' 0"	36' 4"	30' 8"	36' 1"	34' 7"	29' 1"	33' 9"	33' 0"	27' 10"	30' 2"	30' 2"	25' 10"
		16	47' 8"	41' 7"	35' 1"	41' 4"	37' 9"	31' 10"	37' 0"	35' 1"	29' 7"	33' 9"	33' 0"	27' 10"	31' 3"	31' 3"	26' 6"	29' 3"	29' 3"	25' 3"	26' 2"	26' 2"	23' 6"
		24	39' 0"	36' 4"	30' 8"	33' 9"	33' 0"	27' 10"	30' 2"	30' 2"	25' 10"	27' 7"	27' 7"	24' 4"	25' 6"	25' 6"	23' 1"	23' 10"	23' 10"	22' 1"	21' 4"	21' 4"	20' 6"
800S162-118	50	12	55' 6"	48' 6"	40' 10"	50' 4"	44' 1"	37' 2"	46' 9"	40' 10"	34' 6"	44' 1"	38' 6"	32' 6"	41' 9"	36' 7"	30' 9"	40' 0"	35' 0"	29' 6"	37' 2"	32' 6"	27' 4"
		16	50' 4"	44' 1"	37' 2"	45' 9"	40' 0"	33' 9"	42' 6"	37' 2"	31' 3"	40' 0"	35' 0"	29' 6"	38' 0"	33' 2"	28' 0"	36' 0"	31' 9"	26' 9"	32' 1"	29' 6"	24' 10"
		24	44' 1"	38' 6"	32' 6"	40' 0"	35' 0"	29' 6"	37' 2"	32' 6"	27' 4"	33' 10"	30' 6"	25' 9"	31' 4"	29' 0"	24' 6"	29' 3"	27' 9"	23' 4"	26' 1"	25' 9"	21' 8"
800S200-43	33	12	30' 1"	30' 1"	30' 1"	26' 0"i	26' 0"i	26' 0"i	23' 3"i	23' 3"i	23' 3"i	21' 3"i	21' 3"i	21' 3"i	19' 8"a	19' 8"a	19' 8"a	18' 4"a	18' 4"a	18' 4"a	16' 6"a	16' 6"a	16' 6"a
		16	26' 0"i	26' 0"i	26' 0"i	22' 6"i	22' 6"i	22' 6"i	20' 2"a	20' 2"a	20' 2"a	18' 4"a	18' 4"a	18' 4"a	17' 0"a	17' 0"a	17' 0"a	15' 10"a	15' 10"a	15' 10"a	14' 3"a	14' 3"a	14' 3"a
		24	21' 3"i	21' 3"i	21' 3"i	18' 4"a	18' 4"a	18' 4"a	16' 6"a	16' 6"a	16' 6"a	15' 0"a	15' 0"a	15' 0"a	13' 10"a	13' 10"a	13' 10"a	12' 10"a	12' 10"a	12' 10"a	11' 3"a	11' 3"a	11' 3"a
800S200-43	50	12	34' 2"	34' 2"	31' 7"	29' 7"	29' 7"	28' 8"	26' 6"	26' 6"	26' 6"	24' 2"	24' 2"	24' 2"	22' 4"i	22' 4"i	22' 4"i	21' 0"i	21' 0"i	21' 0"i	18' 8"i	18' 8"i	18' 8"i
		16	29' 7"	29' 7"	28' 8"	25' 8"	25' 8"	25' 8"	23' 0"i	23' 0"i	23' 0"i	21' 0"i	21' 0"i	21' 0"i	19' 4"i	19' 4"i	19' 4"i	18' 1"i	18' 1"i	18' 1"i	15' 9"a	15' 9"a	15' 9"a
		24	24' 2"	24' 2"	24' 2"	21' 0"i	21' 0"i	21' 0"i	18' 8"i	18' 8"i	18' 8"i	16' 9"a	16' 9"a	16' 9"a	15' 3"a	15' 3"a	15' 3"a	14' 1"a	14' 1"a	14' 1"a	12' 1"a	12' 1"a	12' 1"a
800S200-54	50	12	40' 0"	40' 0"	33' 10"	34' 7"	34' 7"	30' 9"	31' 0"	31' 0"	28' 7"	28' 3"	28' 3"	26' 10"	26' 2"	26' 2"	25' 7"	24' 6"	24' 6"	24' 6"	21' 10"	21' 10"	21' 10"
		16	34' 7"	34' 7"	30' 9"	30' 0"	30' 0"	28' 0"	26' 9"	26' 9"	26' 0"	24' 6"	24' 6"	24' 6"	22' 8"	22' 8"	22' 8"	21' 2"	21' 2"	21' 2"	19' 0"i	19' 0"i	19' 0"i
		24	28' 3"	28' 3"	26' 10"	24' 6"	24' 6"	24' 6"	21' 10"	21' 10"	21' 10"	20' 0"i	20' 0"i	20' 0"i	18' 6"i	18' 6"i	18' 6"i	17' 3"i	17' 3"i	17' 3"i	15' 6"a	15' 6"a	15' 6"a
800S200-68	50	12	46' 8"	43' 2"	36' 4"	40' 6"	39' 3"	33' 1"	36' 2"	36' 2"	30' 8"	33' 0"	33' 0"	28' 10"	30' 7"	30' 7"	27' 6"	28' 7"	28' 7"	26' 3"	25' 7"	25' 7"	24' 4"
		16	40' 6"	39' 3"	33' 1"	35' 1"	35' 1"	30' 1"	31' 4"	31' 4"	27' 10"	28' 7"	28' 7"	26' 3"	26' 6"	26' 6"	25' 0"	24' 9"	24' 9"	23' 10"	22' 2"	22' 2"	22' 2"
		24	33' 0"	33' 0"	28' 10"	28' 7"	28' 7"	26' 3"	25' 7"	25' 7"	24' 4"	23' 4"	23' 4"	23' 0"	21' 7"	21' 7"	21' 7"	20' 2"	20' 2"	20' 2"	18' 1"i	18' 1"i	18' 1"i
800S200-97	50	12	55' 0"	48' 1"	40' 6"	50' 0"	43' 8"	36' 9"	45' 7"	40' 6"	34' 2"	41' 7"	38' 1"	32' 2"	38' 6"	36' 2"	30' 7"	36' 0"	34' 8"	29' 2"	32' 2"	32' 2"	27' 1"
		16	50' 0"	43' 8"	36' 9"	44' 1"	39' 8"	33' 6"	39' 6"	36' 9"	31' 1"	36' 0"	34' 8"	29' 2"	33' 4"	32' 10"	27' 9"	31' 2"	31' 2"	26' 7"	27' 10"	27' 10"	24' 8"
		24	41' 7"	38' 1"	32' 2"	36' 0"	34' 8"	29' 2"	32' 2"	32' 2"	27' 1"	29' 4"	29' 4"	25' 6"	27' 2"	27' 2"	24' 3"	25' 6"	25' 6"	23' 2"	22' 9"	22' 9"	21' 6"
800S200-118	50	12	58' 3"	50' 10"	42' 10"	52' 10"	46' 3"	39' 0"	49' 2"	42' 10"	36' 2"	46' 3"	40' 4"	34' 1"	43' 6"	38' 4"	32' 4"	40' 8"	36' 8"	31' 0"	36' 4"	34' 1"	28' 8"
		16	52' 10"	46' 3"	39' 0"	48' 1"	42' 0"	35' 4"	44' 7"	39' 0"	32' 10"	40' 8"	36' 8"	31' 0"	37' 8"	34' 10"	29' 4"	35' 2"	33' 4"	28' 1"	31' 6"	31' 0"	26' 1"
		24	46' 3"	40' 4"	34' 1"	40' 8"	36' 8"	31' 0"	36' 4"	34' 1"	28' 8"	33' 2"	32' 1"	27' 1"	30' 8"	30' 6"	25' 8"	28' 9"	28' 9"	24' 7"	25' 8"	25' 8"	22' 9"
800S250-43	33	12	30' 9"	30' 9"	30' 9"	26' 8"i	26' 8"i	26' 8"i	23' 10"i	23' 10"i	23' 10"i	21' 9"i	21' 9"i	21' 9"i	20' 2"a	20' 2"a	20' 2"a	18' 10"a	18' 10"a	18' 10"a	16' 10"a	16' 10"a	16' 10"a
		16	26' 8"i	26' 8"i	26' 8"i	23' 1"i	23' 1"i	23' 1"i	20' 8"a	20' 8"a	20' 8"a	18' 10"a	18' 10"a	18' 10"a	17' 6"a	17' 6"a	17' 6"a	16' 3"a	16' 3"a	16' 3"a	14' 7"a	14' 7"a	14' 7"a
		24	21' 9"i	21' 9"i	21' 9"i	18' 10"a	18' 10"a	18' 10"a	16' 10"a	16' 10"a	16' 10"a	15' 4"a	15' 4"a	15' 4"a	14' 1"a	14' 1"a	14' 1"a	13' 0"a	13' 0"a	13' 0"a	11' 3"a	11' 3"a	11' 3"a
800S250-43	50	12	35' 0"	35' 0"	32' 7"	30' 3"	30' 3"	29' 7"	27' 1"	27' 1"	27' 1"	24' 8"	24' 8"	24' 8"	22' 10"i	22' 10"i	22' 10"i	21' 4"i	21' 4"i	21' 4"i	18' 10"i	18' 10"i	18' 10"i
		16	30' 3"	30' 3"	29' 7"	26' 2"	26' 2"	26' 2"	23' 6"i	23' 6"i	23' 6"i	21' 4"i	21' 4"i	21' 4"i	19' 8"i	19' 8"i	19' 8"i	18' 2"i	18' 2"i	18' 2"i	15' 10"a	15' 10"a	15' 10"a
		24	24' 8"	24' 8"	24' 8"	21' 4"i	21' 4"i	21' 4"i	18' 10"i	18' 10"i	18' 10"i	16' 10"a	16' 10"a	16' 10"a	15' 4"a	15' 4"a	15' 4"a	14' 1"a	14' 1"a	14' 1"a	12' 2"a	12' 2"a	12' 2"a
800S250-54	50	12	41' 0"	41' 0"	35' 3"	35' 6"	35' 6"	32' 0"	31' 8"	31' 8"	29' 8"	29' 0"	29' 0"	28' 0"	26' 9"	26' 9"	26' 7"	25' 1"	25' 1"	25' 1"	22' 4"	22' 4"	22' 4"
		16	35' 6"	35' 6"	32' 0"	30' 8"	30' 8"	29' 1"	27' 6"	27' 6"	27' 0"	25' 1"	25' 1"	25' 1"	23' 2"	23' 2"	23' 2"	21' 8"i	21' 8"i	21' 8"i	19' 4"i	19' 4"i	19' 4"i
		24	29' 0"	29' 0"	28' 0"	25' 1"	25' 1"	25' 1"	22' 4"	22' 4"	22' 4"	20' 6"i	20' 6"i	20' 6"i	19' 0"i	19' 0"i	19' 0"i	17' 8"i	17' 8"i	17' 8"i	15' 10"a	15' 10"a	15' 10"a
800S250-68	50	12	48' 0"	45' 1"	38' 0"	41' 6"	41' 0"	34' 7"	37' 1"	37' 1"	32' 1"	33' 10"	33' 10"	30' 2"	31' 4"	31' 4"	28' 8"	29' 4"	29' 4"	27' 4"	26' 3"	26' 3"	25' 6"
		16	41' 6"	41' 0"	34' 7"	36' 0"	36' 0"	31' 4"	32' 2"	32' 2"	29' 2"	29' 4"	29' 4"	27' 4"	27' 2"	27' 2"	26' 1"	25' 4"	25' 4"	24' 10"	22' 8"	22' 8"	22' 8"
		24	33' 10"	33' 10"	30' 2"	29' 4"	29' 4"	27' 4"	26' 3"	26' 3"	25' 6"	24' 0"	24' 0"	24' 0"	22' 2"	22' 2"	22' 2"	20' 9"	20' 9"	20' 9"	18' 7"i	18' 7"i	18' 7"i
800S250-97	50	12	57' 6"	50' 2"	42' 4"	52' 2"	45' 7"	38' 6"	47' 0"	42' 4"	35' 8"	42' 10"	39' 10"	33' 7"	39' 8"	37' 10"	31' 10"	37' 2"	36' 2"	30' 7"	33' 2"	33' 2"	28' 4"
		16	52' 2"	45' 7"	38' 6"	45' 6"	41' 6"	35' 0"	40' 8"	38' 6"	32' 6"	37' 2"	36' 2"	30' 7"	34' 4"	34' 4"	29' 0"	32' 2"	32' 2"	27' 9"	28' 9"	28' 9"	25' 9"
		24	42' 10"	39' 10"	33' 7"	37' 2"	36' 2"	30' 7"	33' 2"	33' 2"	28' 4"	30' 3"	30' 3"	26' 8"	28' 1"	28' 1"	25' 4"	26' 3"	26' 3"	24' 2"	23' 6"	23' 6"	22' 6"
800S250-118	50	12	61' 0"	53' 3"	44' 10"	55' 4"	48' 4"	40' 9"	51' 4"	44' 10"	37' 10"	48' 4"	42' 3"	35' 8"	45' 1"	40' 2"	33' 10"	42' 2"	38' 4"	32' 4"	37' 9"	35' 8"	30' 1"
		16	55' 4"	48' 4"	40' 9"	50' 3"	44' 0"	37' 1"	46' 2"	40' 9"	34' 4"	42' 2"	38' 4"	32' 4"	39' 1"	36' 6"	30' 9"	36' 7"	34' 10"	29' 4"	32' 8"	32' 4"	27' 3"
		24	48' 4"	42' 3"	35' 8"	42' 2"	38' 4"	32' 4"	37' 9"	35' 8"	30' 1"	34' 6"	33' 6"	28' 3"	31' 10"	31' 10"	26' 10"	29' 10"	29' 10"	25' 8"	26' 8"	26' 8"	23' 10"
800S300-54	50	12	41' 7"	41' 7"	36' 0"	36' 0"	36' 0"	32' 8"	32' 2"	32' 2"	30' 4"	29' 4"	29' 4"	28' 7"	27' 2"	27' 2"	27' 1"	25' 4"	25' 4"	25' 4"	22' 9"	22' 9"	22' 9"
		16	36' 0"	36' 0"	32' 8"	31' 2"	31' 2"	29' 8"	27' 10"	27' 10"	27' 7"	25' 4"	25' 4"	25' 4"	23' 7"	23' 7"	23' 7"	22' 0"i	22' 0"i	22' 0"i	19' 8"i	19' 8"i	19' 8"i
		24	29' 4"	29' 4"	28' 7"	25' 4"	25' 4"	25' 4"	22' 9"	22' 9"	22' 9"	20' 9"i	20' 9"i	20' 9"i	19' 2"i	19' 2"i	19' 2"i	18' 0"i	18' 0"i	18' 0"i	16' 1"a	16' 1"a	16' 1"a
800S300-68	50	12	48' 9"	46' 6"	39' 2"	42' 2"	42' 2"	35' 7"	37' 9"	37' 9"	33' 1"	34' 6"	34' 6"	31' 1"	31' 10"	31' 10"	29' 7"	29' 10"	29' 10"	28' 3"	26' 8"	26' 8"	26' 2"
		16	42' 2"	42' 2"	35' 7"	36' 7"	36' 7"	32' 4"	32' 8"	32' 8"	30' 0"	29' 10"	29' 10"	28' 3"	27' 7"	27' 7"	26' 10"	25' 10"	25' 10"	25' 8"	23' 1"	23' 1"	23' 1"
		24	34' 6"	34' 6"	31' 1"	29' 10"	29' 10"	28' 3"	26' 8"	26' 8"	26' 2"	24' 4"	24' 4"	24' 4"	22' 7"	22' 7"	22' 7"	21' 1"	21' 1"	21' 1"	18' 10"i	18' 10"i	18' 10"i
800S300-97	50	12	59' 8"	52' 1"	44' 0"	53' 8"	47' 4"	40' 0"	48' 0"	44' 0"	37' 1"	43' 9"	41' 4"	34' 10"	40' 7"	39' 3"	33' 2"	37' 10"	37' 7"	31' 8"	33' 10"	33' 10"	29' 4"
		16	53' 8"	47' 4"	40' 0"	46' 6"	43' 0"	36' 3"	41' 7"	40' 0"	33' 8"	37' 10"	37' 7"	31' 8"	35' 1"	35' 1"	30' 1"	32' 10"	32' 10"	28' 9"	29' 4"	29' 4"	26' 8"
		24	43' 9"	41' 4"	34' 10"	37' 10"	37' 7"	31' 8"	33' 10"	33' 10"	29' 4"	31' 0"	31' 0"	27' 8"	28' 8"	28' 8"	26' 3"	26' 9"	26' 9"	25' 2"	24' 0"	24' 0"	23' 4"
800S300-118	50	12	63' 4"	55' 4"	46' 8"	57' 7"	50' 3"	42' 6"	53' 6"	46' 8"	39' 4"	49' 10"	44' 0"	37' 1"	46' 2"	41' 9"	35' 2"	43' 3"	40' 0"	33' 8"	38' 8"	37' 1"	31' 3"
		16	57' 7"	50' 3"	42' 6"	52' 4"	45' 8"	38' 7"	47' 4"	42' 6"	35' 9"	43' 3"	40' 0"	33' 8"	40' 0"	38' 0"	32' 0"	37' 6"	36' 3"	30' 7"	33' 6"	33' 6"	28' 4"
		24	49' 10"	44' 0"	37' 1"	43' 3"	40' 0"	33' 8"	38' 8"	37' 1"	31' 3"	35' 3"	34' 10"	29' 4"	32' 8"	32' 8"	28' 0"	30' 7"	30' 7"	26' 8"	27' 4"	27' 4"	24' 9"

NOTE: See page 23 for Table Notes.

CURTAINWALL ILLUSTRATIONS

INFILL WALL APPLICATION

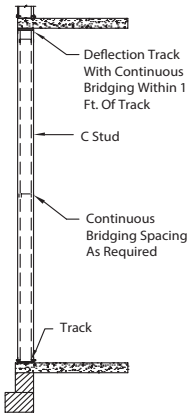

INFILL STUD

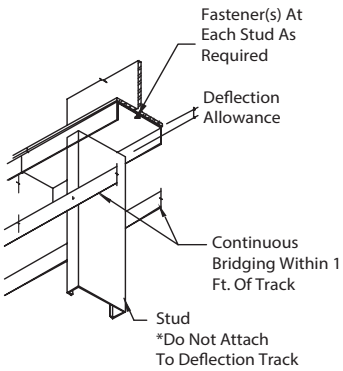

DEFLECTION TRACK

SPANDREL APPLICATION

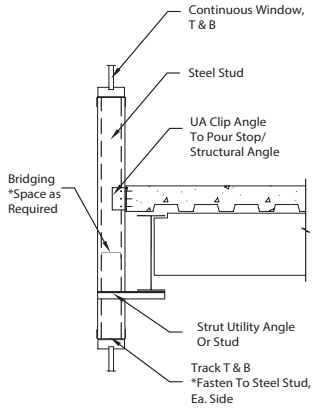

STRUT TO BEAM

SPANDREL APPLICATION

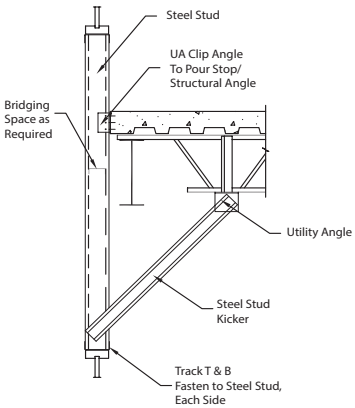

DIAGONAL KICKER

BY-PASS WALL APPLICATION

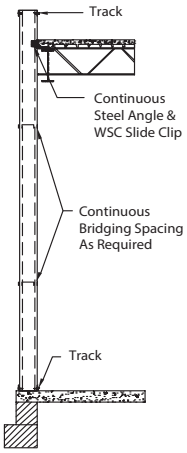

BY-PASS WALL

CURTAINWALL STUD

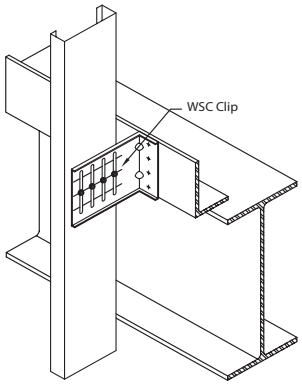

WSC SLIDE CLIP

WINDOW OPENING DETAILS

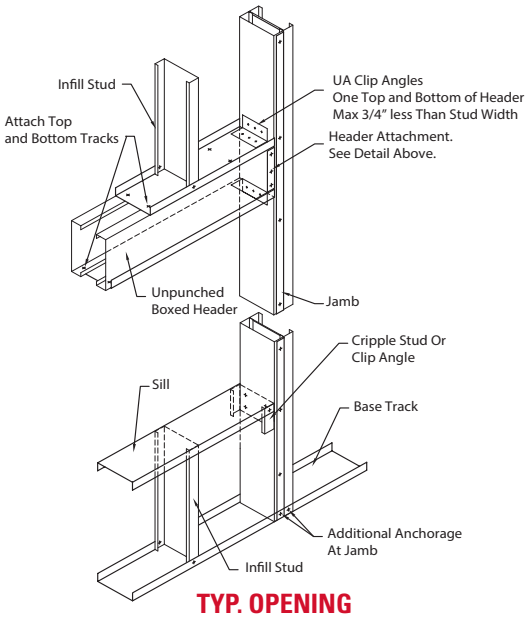

TYP. OPENING

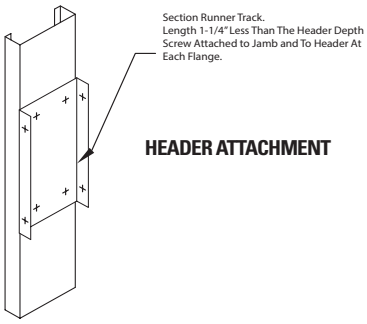

HEADER ATTACHMENT

GRAVITY/LATERAL ATTACHMENT ALTERNATIVES

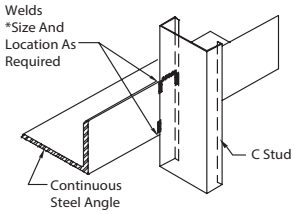

DIRECT TO STEEL ANGLE

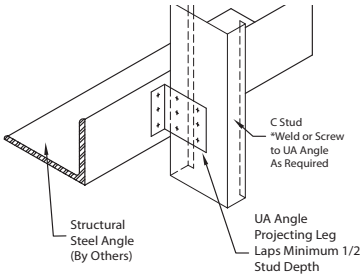

UA ANGLE TO STEEL ANGLE

1. NOTES:
2. Size, spacing and anchorage of framing components shall be qualified by design.
3. Vertical deflection of the primary frame shall be accommodated in the window head.

For more information, please contact Marino\WARE® Technical Services at 866.545.1545
This technical information reflects the most current information available and supersedes any and all previous publications effective February 17, 2023 | MW-Cold Formed Catalog | © WARE Industries, Inc., 2023

DIAGONAL CROSS-BRACING

DIAGONAL RACKING BRACING

Diagonal bracing and connections must be designed for the specific conditions of a building. For allowable load capacities of Marino\WARE members and assistance in developing connections, please contact Marino\WARE's Technical Services Department. Buildings must be properly braced to resist racking under wind and seismic loads. In steel-framed construction, diagonal strap bracing offers an economical and effective means to provide this resistance. Straps are sloped to resist racking forces in tension. They are installed over framing members and easily covered with facing materials. Diagonal strap ends are secured by screws or welded to transfer the tension loads to the wall framing and floor assembly. End connections must be designed to transfer accumulated design loads. At the foundation, floor anchors must be adequate to prevent uplift and horizontal shear. Splicing of strapping is not recommended.

DIAGONAL CROSS-BRACING

For selection of Flat Strap (FS) subjected to tension loads in shear wall assemblies or miscellaneous applications.

USE:

Select a flat strap which provides an allowable tensile capacity equal to or greater than the applied tension load.

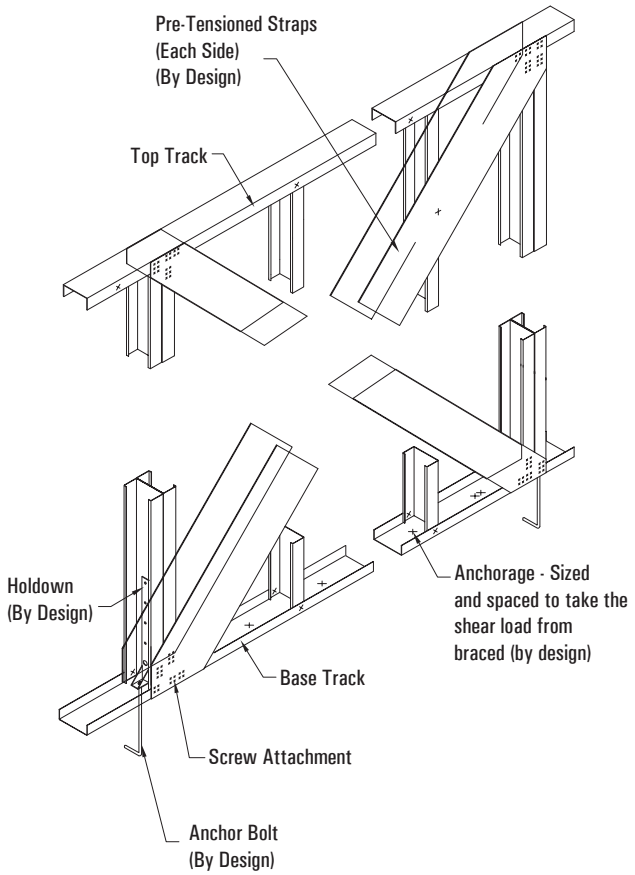

CROSS BRACING: ALLOWABLE TENSION CAPACITY BASED ON SINGLE STRAP		
Flat Strap Bracing (thickness)	Area (in^2)	P_a Without 1/3 increase
2" x 20ga (33mil)	0.0692	1.37
2" x 18ga (43 mil)	0.0902	1.78
4" x 18ga (43 mil)	0.1804	3.57
2" x16ga(54 mil)	0.1132	3.39
4" x 16ga(54 mil)	0.2264	6.79
2" x14ga(68 mil)	0.1426	4.28
4" x 14ga(68 mil)	0.2852	8.56

NOTES:
1. Strap end connections shall be designed to transfer the tensile load.
2. 16 and 14 gauge strap: Fy (min) = 50 ksi
3. 20 and 18 gauge strap: Fy (min) = 33 ksi

COMBINED AXIAL AND LATERAL LOADS

NOTES:

1. Allowable axial loads listed are based on simple one span condition and are given in kips (1 kip = 1,000 lb).
2. Allowable axial loads are determined based on Section H1 of AISI S100 with the assumption that the axial load passes through the centroid of the effective section.
3. Allowable axial loads based on 4'-0" on center bracing.
4. Studs are assumed to be adequately braced at a maximum spacing of L_u to develop the full allowable moment, M_a.
5. Listed wind pressures represent the calculated design wind pressure (1.0W based on 2009 IBC or 0.6W based on 2012 IBC and later editions). For deflection calculations, the listed wind pressures have been reduced by 0.70 as per IBC. The 5 psf pressure has not been reduced for deflection checks.
6. End supports have not been checked for web crippling.
7. If no note, deflection meets L/720
8. [1]Deflection meets L/120
9. [2]Deflection meets L/240
10. [3]Deflection meets L/360
11. [4]Deflection meets L/600
12. See General Notes on Page 6.

5 psf Lateral Load (Interior Walls)

3 5/8" MEMBERS

Wall Height (ft)	Stud Spacing (in.) o.c.	362S137				362S162				362S200				362S250			
		33 ksi		50 ksi		33 ksi		50 ksi		33 ksi		50 ksi		33 ksi		50 ksi	
		33	43	54	68	33	43	54	68	33	43	54	68	33	43	54	68
8	12	1.48	2.13	3.31	4.36	1.87	2.64	4.14	5.37	2.23	3.28	5.17	6.67	2.43	3.72	5.81	7.75
	16	1.41	2.06	3.24	4.29	1.79	2.56	4.07	5.30	2.15	3.19	5.09	6.59	2.35	3.63	5.72	7.66
	24	1.27	1.92	3.11	4.16	1.64	2.41	3.92	5.16	1.99	3.03	4.93	6.43	2.19	3.45	5.56	7.49
9	12	1.37	2.00	3.09	4.06	1.73	2.47	3.84	4.97	2.08	3.07	4.78	6.15	2.28	3.52	5.45	7.16
	16	1.28	1.91	3.01	3.98	1.63	2.37	3.75	4.88	1.98	2.96	4.68	6.05	2.17	3.41	5.34	7.05
	24	1.11	1.73	2.85	3.81	1.45	2.19	3.57	4.70	1.78	2.75	4.49	5.86	1.97	3.18	5.13	6.84
10	12	1.25	1.85	2.84	3.72	1.58	2.28	3.51	4.53	1.91	2.83	4.36	5.59	2.11	3.29	5.07	6.52
	16	1.14	1.74	2.74	3.62	1.46	2.16	3.40	4.42	1.79	2.70	4.24	5.48	1.98	3.15	4.94	6.39
	24	0.95	1.53	2.54	3.42	1.25	1.94	3.19	4.21	1.56	2.46	4.01	5.25	1.75	2.89	4.68	6.14
12	12	0.98	1.50	2.25	2.96	1.24	1.86	2.77	3.59	1.55	2.32	3.44	4.42	1.73	2.73	4.06	5.20
	16	0.85[4]	1.36	2.13	2.83	1.10	1.71	2.64	3.45	1.39	2.15	3.30	4.28	1.57	2.55	3.89	5.04
	24	0.61[3]	1.11[3]	1.90[4]	2.60	0.85[3]	1.44[4]	2.39	3.20	1.10[3]	1.86	3.02	4.00	1.28[4]	2.22	3.58	4.73
14	12	0.71[3]	1.15[4]	1.73	2.29	0.92[4]	1.43	2.12	2.77	1.17	1.81	2.63	3.42	1.35	2.15	3.11	4.04
	16	0.57[3]	0.99[3]	1.60[4]	2.15	0.77[3]	1.27[4]	1.98	2.62	1.00[3]	1.63[4]	2.47	3.26	1.17[4]	1.95	2.94	3.86
	24	0.33[2]	0.72[2]	1.36[3]	1.90[3]	0.51[2]	0.98[3]	1.72[3]	2.36[4]	0.70[3]	1.30[3]	2.19[3]	2.97	0.85[3]	1.58[3]	2.61[4]	3.53
16	12	0.48[3]	0.83[3]	1.31[3]	1.75[4]	0.65[3]	1.06[3]	1.61[4]	2.13	0.84[3]	1.35[4]	2.01	2.64	1.01[3]	1.63	2.39	3.14
	16	0.35[2]	0.68[2]	1.18[3]	1.61[3]	0.50[2]	0.89[3]	1.47[3]	1.98[4]	0.66[3]	1.17[3]	1.85[3]	2.48	0.82[3]	1.42[3]	2.21[4]	2.96
	24	0.11[1]	0.41[1]	0.94[2]	1.37[2]	0.24[1]	0.61[2]	1.22[2]	1.72[3]	0.37[2]	0.86[2]	1.57[3]	2.20[3]	0.49[2]	1.06[3]	1.89[3]	2.63[3]

15 psf Lateral Load

3 5/8" MEMBERS

Wall Height (ft)	Stud Spacing (in.) o.c.	362S137				362S162				362S200				362S250			
		33 ksi		50 ksi		33 ksi		50 ksi		33 ksi		50 ksi		33 ksi		50 ksi	
		33	43	54	68	33	43	54	68	33	43	54	68	33	43	54	68
8	12	1.07	1.71	2.92	3.96	1.42	2.19	3.72	4.95	1.76	2.79	4.70	6.20	1.95	3.20	5.31	7.24
	16	0.89	1.52	2.74	3.78	1.22	1.98	3.51	4.74	1.53	2.56	4.48	5.98	1.73	2.95	5.07	7.00
	24	0.53[4]	1.14	2.39	3.41	0.83	1.58	3.13	4.35	1.11	2.12	4.05	5.55	1.30	2.48	4.62	6.52
9	12	0.88	1.48	2.62	3.57	1.19	1.92	3.32	4.45	1.50	2.46	4.20	5.58	1.69	2.87	4.83	6.53
	16	0.66	1.25	2.40	3.34	0.95	1.66	3.08	4.20	1.23	2.19	3.93	5.31	1.42	2.57	4.54	6.23
	24	0.25[3]	0.82[4]	1.99	2.92	0.51[3]	1.20	2.63	3.74	0.75[4]	1.67	3.43	4.80	0.92	2.01	3.99	5.67
10	12	0.68	1.24	2.28	3.14	0.96	1.63	2.90	3.92	1.23	2.12	3.68	4.92	1.41	2.51	4.32	5.78
	16	0.43[3]	0.98[4]	2.03	2.88	0.69[4]	1.34	2.63	3.64	0.94[4]	1.81	3.38	4.62	1.11	2.17	3.98	5.44
	24		0.50[3]	1.58[3]	2.41[4]	0.21[3]	0.83[3]	2.13[4]	3.12	0.40[3]	1.24[4]	2.82	4.05	0.55[3]	1.54	3.36	4.81
12	12	0.31[3]	0.77[3]	1.60[4]	2.28	0.52[3]	1.07[4]	2.06	2.86	0.73[3]	1.46	2.65	3.63	0.88[4]	1.77	3.16	4.31
	16		0.47[3]	1.33[3]	1.99[3]	0.22[2]	0.75[3]	1.76[3]	2.55[4]	0.40[3]	1.10[3]	2.32[4]	3.29	0.53[3]	1.37[4]	2.78	3.93
	24			0.84[2]	1.48[3]		0.19[2]	1.24[3]	2.00[3]		0.48[3]	1.73[3]	2.68[3]		0.67[3]	2.11[3]	3.24[4]
14	12		0.37[2]	1.05[3]	1.58[3]	0.17[2]	0.60[3]	1.39[3]	2.01[3]	0.31[2]	0.89[3]	1.82[3]	2.59[4]	0.43[3]	1.12[3]	2.19[4]	3.10
	16			0.78[2]	1.29[3]		0.28[2]	1.09[2]	1.70[3]		0.53[2]	1.49[3]	2.25[3]		0.71[3]	1.82[3]	2.72[4]
	24			0.31[1]	0.79[2]			0.59[1]	1.17[2]			0.92[2]	1.66[2]			1.17[2]	2.04[3]
16	12			0.65[2]	1.06[2]		0.25[2]	0.90[2]	1.39[3]		0.46[2]	1.21[3]	1.83[3]		0.61[2]	1.49[3]	2.21[3]
	16			0.39[1]	0.78[2]			0.62[1]	1.09[2]		0.12[1]	0.90[2]	1.50[2]		0.22[2]	1.13[2]	1.84[3]
	24				0.31[1]			0.15[1]	0.59[1]			0.37[1]	0.95[1]			0.52[1]	1.21[2]

If no note, deflection meets L/720 1. Deflection meets L/120 2. Deflection meeds L/240 3. Deflection meed L/360 4. Deflection meets L/600

For more information, please contact Marino\WARE® Technical Services at 866.545.1545
This technical information reflects the most current information available and supersedes any and all previous publications effective February 17, 2023 | MW-Cold Formed Catalog | © WARE Industries, Inc., 2023

COMBINED AXIAL AND LATERAL LOADS

20 psf Lateral Load

3 5/8" MEMBERS

Wall Height (ft)	Stud Spacing (in.) o.c.	362S137				362S162				362S200				362S250			
		33 ksi		50 ksi		33 ksi		50 ksi		33 ksi		50 ksi		33 ksi		50 ksi	
		33	43	54	68	33	43	54	68	33	43	54	68	33	43	54	68
8	12	0.89	1.52	2.74	3.78	1.22	1.98	3.51	4.74	1.53	2.56	4.48	5.98	1.73	2.95	5.07	7.00
	16	0.65	1.27	2.51	3.53	0.96	1.71	3.26	4.48	1.25	2.26	4.19	5.69	1.44	2.63	4.77	6.68
	24	0.21[3]	0.80[4]	2.06	3.07	0.48[4]	1.20	2.77	3.98	0.72[4]	1.71	3.64	5.15	0.89	2.04	4.18	6.07
9	12	0.66	1.25	2.40	3.34	0.95	1.66	3.08	4.20	1.23	2.19	3.93	5.31	1.42	2.57	4.54	6.23
	16	0.38[3]	0.96[4]	2.12	3.05	0.65[4]	1.35	2.78	3.89	0.91	1.84	3.59	4.97	1.08	2.19	4.17	5.85
	24		0.42[3]	1.61[3]	2.52[4]	0.11[3]	0.77[3]	2.21[4]	3.31	0.31[3]	1.20[4]	2.96	4.33	0.46[3]	1.49	3.48	5.14
10	12	0.43[3]	0.98[4]	2.03	2.88	0.69[4]	1.34	2.63	3.64	0.94[4]	1.81	3.38	4.62	1.11	2.17	3.98	5.44
	16	0.13[3]	0.65[3]	1.72[4]	2.56	0.36[3]	0.99[3]	2.29	3.29	0.57[3]	1.42[4]	3.00	4.23	0.73[4]	1.74	3.56	5.02
	24			1.17[3]	1.97[3]		0.36[3]	1.68[3]	2.65[3]		0.73[3]	2.32[3]	3.54[4]		0.97[3]	2.80[4]	4.23
12	12		0.47[3]	1.33[3]	1.99[3]	0.22[2]	0.75[3]	1.76[3]	2.55[4]	0.40[3]	1.10[3]	2.32[4]	3.29	0.53[3]	1.37[4]	2.78	3.93
	16		0.11[2]	1.00[3]	1.64[3]		0.37[2]	1.40[3]	2.17[3]		0.68[3]	1.91[3]	2.88[4]	0.11[2]	0.90[3]	2.33[3]	3.46[4]
	24			0.42[2]	1.03[2]			0.78[2]	1.51[2]			1.21[2]	2.15[3]			1.53[3]	2.63[3]
14	12			0.78[2]	1.29[3]		0.28[2]	1.09[2]	1.70[3]		0.53[2]	1.49[3]	2.25[3]		0.71[3]	1.82[3]	2.72[4]
	16			0.46[1]	0.95[2]			0.75[2]	1.34[2]		0.11[2]	1.10[2]	1.84[3]		0.23[2]	1.37[2]	2.26[3]
	24				0.36[1]			0.15[1]	0.70[1]			0.43[1]	1.14[2]			0.61[1]	1.46[2]
16	12			0.39[1]	0.78[2]			0.62[1]	1.09[2]		0.12[1]	0.90[2]	1.50[2]		0.22[2]	1.13[2]	1.84[3]
	16				0.46[1]			0.29[1]	0.75[1]			0.54[1]	1.12[2]			0.71[1]	1.41[2]
	24								0.16[1]				0.47[1]				0.66[1]

25 psf Lateral Load

3 5/8" MEMBERS

Wall Height (ft)	Stud Spacing (in.) o.c.	362S137				362S162				362S200				362S250			
		33 ksi		50 ksi		33 ksi		50 ksi		33 ksi		50 ksi		33 ksi		50 ksi	
		33	43	54	68	33	43	54	68	33	43	54	68	33	43	54	68
8	12	0.71	1.33	2.56	3.59	1.02	1.77	3.32	4.55	1.32	2.33	4.26	5.77	1.51	2.71	4.84	6.76
	16	0.42[4]	1.03	2.28	3.30	0.71	1.45	3.01	4.23	0.98	1.98	3.91	5.42	1.16	2.33	4.47	6.37
	24		0.47[3]	1.75[4]	2.74	0.14[3]	0.84[4]	2.42	3.62	0.35[3]	1.31	3.25	4.75	0.51[4]	1.61	3.77	5.64
9	12	0.45[3]	1.03	2.19	3.13	0.73[4]	1.42	2.85	3.97	0.99	1.92	3.68	5.05	1.16	2.28	4.26	5.95
	16	0.13[3]	0.68[3]	1.86[4]	2.78	0.37[3]	1.05[4]	2.49	3.59	0.60[3]	1.51	3.27	4.64	0.76[4]	1.83	3.82	5.49
	24			1.25[3]	2.15[3]		0.37[3]	1.83[3]	2.91[4]		0.76[3]	2.53[4]	3.89		1.01[3]	3.00[4]	4.65
10	12	0.21[3]	0.73[3]	1.80[4]	2.64	0.44[3]	1.08[4]	2.37	3.37	0.66[3]	1.52	3.09	4.33	0.82[4]	1.84	3.66	5.12
	16		0.35[3]	1.43[3]	2.26[4]		0.67[3]	1.98[3]	2.96[4]	0.24[3]	1.06[3]	2.65[4]	3.88	0.38[3]	1.34[4]	3.17	4.61
	24			0.79[2]	1.57[3]			1.27[3]	2.22[3]		0.26[3]	1.85[3]	3.06[3]		0.45[3]	2.28[3]	3.70[4]
12	12		0.20[2]	1.07[3]	1.73[3]		0.46[3]	1.49[3]	2.27[3]	0.10[2]	0.78[3]	2.01[3]	2.98[4]	0.21[3]	1.01[3]	2.44[4]	3.57
	16			0.70[2]	1.32[2]			1.08[2]	1.83[3]		0.29[2]	1.55[3]	2.50[3]		0.46[3]	1.91[3]	3.03[3]
	24				0.62[1]			0.36[1]	1.07[2]			0.74[2]	1.66[2]			1.00[2]	2.08[3]
14	12			0.53[2]	1.03[2]			0.83[2]	1.42[2]		0.21[2]	1.19[2]	1.94[3]		0.35[2]	1.48[3]	2.37[3]
	16			0.17[1]	0.64[1]			0.43[1]	1.01[2]			0.75[2]	1.48[2]			0.98[2]	1.84[3]
	24								0.29[1]				0.68[1]			0.11[1]	0.93[2]
16	12			0.16[1]	0.54[1]			0.37[1]	0.83[1]			0.63[1]	1.21[2]			0.81[2]	1.51[2]
	16				0.17[1]				0.44[1]			0.22[1]	0.78[1]			0.34[1]	1.01[2]
	24																0.17[1]

30 psf Lateral Load

3 5/8" MEMBERS

Wall Height (ft)	Stud Spacing (in.) o.c.	362S137				362S162				362S200				362S250			
		33 ksi		50 ksi		33 ksi		50 ksi		33 ksi		50 ksi		33 ksi		50 ksi	
		33	43	54	68	33	43	54	68	33	43	54	68	33	43	54	68
8	12	0.53[4]	1.14	2.39	3.41	0.83	1.58	3.13	4.35	1.11	2.12	4.05	5.55	1.30	2.48	4.62	6.52
	16	0.21[3]	0.80[4]	2.06	3.07	0.48[4]	1.20	2.77	3.98	0.72[4]	1.71	3.64	5.15	0.89	2.04	4.18	6.07
	24		0.16[3]	1.45[3]	2.43[4]		0.50[3]	2.09[4]	3.28		0.94[4]	2.88	4.38	0.15[3]	1.21[4]	3.37	5.22
9	12	0.25[3]	0.82[4]	1.99	2.92	0.51[3]	1.20	2.63	3.74	0.75[4]	1.67	3.43	4.80	0.92	2.01	3.99	5.67
	16		0.42[3]	1.61[3]	2.52[4]	0.11[3]	0.77[3]	2.21[4]	3.31	0.31[3]	1.20[4]	2.96	4.33	0.46[3]	1.49	3.48	5.14
	24			0.92[3]	1.79[3]			1.46[3]	2.52[3]		0.35[3]	2.12[3]	3.46[4]		0.56[3]	2.55[3]	4.17
10	12		0.50[3]	1.58[3]	2.41[4]	0.21[3]	0.83[3]	2.13[4]	3.12	0.40[3]	1.24[4]	2.82	4.05	0.55[3]	1.54	3.36	4.81
	16			1.17[3]	1.97[3]		0.36[3]	1.68[3]	2.65[3]		0.73[3]	2.32[3]	3.54[4]		0.97[3]	2.80[4]	4.23
	24			0.44[2]	1.20[2]			0.89[2]	1.82[3]			1.42[3]	2.61[3]			1.79[3]	3.19[3]
12	12			0.84[2]	1.48[3]		0.19[2]	1.24[3]	2.00[3]		0.48[3]	1.73[3]	2.68[3]		0.67[3]	2.11[3]	3.24[4]
	16			0.42[2]	1.03[2]			0.78[2]	1.51[2]			1.21[2]	2.15[3]			1.53[3]	2.63[3]
	24				0.25[1]				0.67[1]			0.31[1]	1.21[2]			0.51[2]	1.57[2]
14	12			0.31[1]	0.79[2]			0.59[1]	1.17[2]			0.92[2]	1.66[2]			1.17[2]	2.04[3]
	16				0.36[1]			0.15[1]	0.70[1]			0.43[1]	1.14[2]			0.61[1]	1.46[2]
	24												0.26[1]				0.45[1]
16	12				0.31[1]			0.15[1]	0.59[1]			0.37[1]	0.95[1]			0.52[1]	1.21[2]
	16								0.16[1]				0.47[1]				0.66[1]
	24																

NOTE: See page 30 for Table Notes.

COMBINED AXIAL AND LATERAL LOADS

35 psf Lateral Load

3 5/8" MEMBERS

Wall Height (ft)	Stud Spacing (in.) o.c.	362S137				362S162				362S200				362S250			
		33 ksi		50 ksi		33 ksi		50 ksi		33 ksi		50 ksi		33 ksi		50 ksi	
		33	43	54	68	33	43	54	68	33	43	54	68	33	43	54	68
8	12	0.37[4]	0.97	2.23	3.24	0.65[4]	1.38	2.95	4.16	0.91	1.91	3.84	5.35	1.09	2.25	4.40	6.30
	16		0.58[3]	1.85[4]	2.85	0.25[3]	0.96[4]	2.54	3.74	0.47[3]	1.44	3.38	4.88	0.64[4]	1.75	3.90	5.78
	24			1.17[3]	2.13[3]		0.18[3]	1.78[3]	2.95[4]		0.59[3]	2.53[4]	4.02		0.82[4]	2.98	4.81
9	12		0.61[3]	1.79[4]	2.71	0.31[3]	0.98[4]	2.42	3.52	0.52[3]	1.43	3.19	4.56	0.68[4]	1.75	3.73	5.40
	16		0.17[3]	1.37[3]	2.27[4]		0.50[3]	1.95[3]	3.04[4]		0.91[3]	2.67[4]	4.03	0.17[3]	1.17[4]	3.16	4.81
	24			0.61[2]	1.46[3]			1.11[3]	2.16[3]			1.73[3]	3.06[3]		0.13[3]	2.12[3]	3.72[4]
10	12		0.28[3]	1.37[3]	2.19[3]		0.59[3]	1.90[3]	2.88[4]	0.16[3]	0.98[3]	2.56[4]	3.79	0.30[3]	1.25[4]	3.07	4.52
	16			0.91[3]	1.71[3]			1.40[3]	2.36[3]		0.41[3]	2.00[3]	3.21[4]		0.62[3]	2.45[3]	3.87[4]
	24			0.11[2]	0.85[2]			0.52[2]	1.43[2]			1.02[2]	2.19[3]			1.34[3]	2.72[3]
12	12			0.62[2]	1.25[2]			1.00[2]	1.75[3]		0.20[2]	1.46[3]	2.41[3]		0.36[3]	1.81[3]	2.93[3]
	16			0.16[1]	0.75[2]			0.49[2]	1.22[2]			0.89[2]	1.82[2]			1.17[2]	2.26[3]
	24								0.29[1]				0.79[1]				1.09[2]
14	12			0.10[1]	0.57[1]			0.36[1]	0.93[2]			0.67[2]	1.39[2]			0.88[2]	1.74[2]
	16				0.10[1]				0.42[1]			0.13[1]	0.83[1]			0.27[1]	1.10[2]
	24																
16	12				0.11[1]				0.37[1]			0.14[1]	0.70[1]			0.26[1]	0.92[1]
	16												0.18[1]				0.33[1]
	24																

40 psf Lateral Load

3 5/8" MEMBERS

Wall Height (ft)	Stud Spacing (in.) o.c.	362S137				362S162				362S200				362S250			
		33 ksi		50 ksi		33 ksi		50 ksi		33 ksi		50 ksi		33 ksi		50 ksi	
		33	43	54	68	33	43	54	68	33	43	54	68	33	43	54	68
8	12	0.21[3]	0.80[4]	2.06	3.07	0.48[4]	1.20	2.77	3.98	0.72[4]	1.71	3.64	5.15	0.89	2.04	4.18	6.07
	16		0.36[3]	1.65[4]	2.64		0.73[3]	2.31[4]	3.51	0.23[3]	1.19[4]	3.13	4.63	0.39[3]	1.48	3.63	5.50
	24			0.89[3]	1.83[3]			1.47[3]	2.63[3]		0.24[3]	2.19[3]	3.66[4]		0.45[3]	2.61[4]	4.42
9	12		0.42[3]	1.61[3]	2.52[4]	0.11[3]	0.77[3]	2.21[4]	3.31	0.31[3]	1.20[4]	2.96	4.33	0.46[3]	1.49	3.48	5.14
	16			1.14[3]	2.03[3]		0.24[3]	1.70[3]	2.78[4]		0.62[3]	2.39[3]	3.74		0.86[3]	2.85[4]	4.49
	24			0.31[2]	1.14[2]			0.78[2]	1.81[3]			1.36[3]	2.68[3]			1.72[3]	3.29[3]
10	12			1.17[3]	1.97[3]		0.36[3]	1.68[3]	2.65[3]		0.73[3]	2.32[3]	3.54[4]		0.97[3]	2.80[4]	4.23
	16			0.67[2]	1.45[3]			1.14[3]	2.08[3]		0.11[2]	1.71[3]	2.91[3]		0.28[3]	2.11[3]	3.53[4]
	24				0.52[2]			0.18[2]	1.07[2]			0.63[2]	1.79[2]			0.90[2]	2.27[3]
12	12			0.42[2]	1.03[2]			0.78[2]	1.51[2]			1.21[2]	2.15[3]			1.53[3]	2.63[3]
	16				0.49[1]			0.23[1]	0.94[2]			0.59[2]	1.51[2]			0.83[2]	1.90[2]
	24												0.40[1]				0.65[1]
14	12				0.36[1]			0.15[1]	0.70[1]			0.43[1]	1.14[2]			0.61[1]	1.46[2]
	16								0.16[1]				0.54[1]				0.77[1]
	24																
16	12								0.16[1]				0.47[1]				0.66[1]
	16																
	24																

50 psf Lateral Load

3 5/8" MEMBERS

Wall Height (ft)	Stud Spacing (in.) o.c.	362S137				362S162				362S200				362S250			
		33 ksi		50 ksi		33 ksi		50 ksi		33 ksi		50 ksi		33 ksi		50 ksi	
		33	43	54	68	33	43	54	68	33	43	54	68	33	43	54	68
8	12		0.47[3]	1.75[4]	2.74	0.14[3]	0.84[4]	2.42	3.62	0.35[3]	1.31	3.25	4.75	0.51[4]	1.61	3.77	5.64
	16			1.26[3]	2.23[4]		0.29[3]	1.88[3]	3.06[4]		0.70[3]	2.65[4]	4.13		0.95[4]	3.11	4.95
	24			0.37[2]	1.28[3]			0.90[3]	2.03[3]			1.54[3]	3.00[3]			1.91[3]	3.67[4]
9	12			1.25[3]	2.15[3]		0.37[3]	1.83[3]	2.91[4]		0.76[3]	2.53[4]	3.89		1.01[3]	3.00[4]	4.65
	16			0.71[2]	1.57[3]			1.23[3]	2.28[3]			1.86[3]	3.19[3]		0.27[3]	2.27[3]	3.87[4]
	24				0.54[2]			0.17[2]	1.16[2]			0.66[2]	1.95[3]			0.94[2]	2.48[3]
10	12			0.79[2]	1.57[3]			1.27[3]	2.22[3]		0.26[3]	1.85[3]	3.06[3]		0.45[3]	2.28[3]	3.70[4]
	16			0.22[2]	0.97[2]			0.64[2]	1.56[2]			1.15[2]	2.33[3]			1.49[3]	2.87[3]
	24								0.40[1]				1.04[2]			0.10[2]	1.42[2]
12	12				0.62[1]			0.36[1]	1.07[2]			0.74[2]	1.66[2]			1.00[2]	2.08[3]
	16								0.41[1]				0.93[2]			0.20[1]	1.25[2]
	24																
14	12								0.29[1]				0.68[1]			0.11[1]	0.93[2]
	16																0.15[1]
	24																
16	12																0.17[1]
	16																
	24																

NOTE: See page 30 for Table Notes.

For more information, please contact Marino\WARE® Technical Services at 866.545.1545
This technical information reflects the most current information available and supersedes any and all previous publications effective February 17, 2023 | MW-Cold Formed Catalog | © WARE Industries, Inc., 2023

COMBINED AXIAL AND LATERAL LOADS

5 psf Lateral Load (Interior Walls)

4" MEMBERS

Wall Height (ft)	Stud Spacing (in.) o.c.	400S137				400S162				400S200				400S250			
		33 ksi		50 ksi		33 ksi		50 ksi		33 ksi		50 ksi		33 ksi		50 ksi	
		33	43	54	68	33	43	54	68	33	43	54	68	33	43	54	68
8	12	1.60	2.31	3.66	4.97	2.02	2.86	4.60	6.17	2.39	3.55	5.77	7.62	2.60	3.97	6.26	8.66
	16	1.54	2.24	3.60	4.90	1.95	2.79	4.53	6.10	2.32	3.47	5.69	7.54	2.52	3.88	6.18	8.58
	24	1.41	2.11	3.47	4.77	1.81	2.65	4.40	5.96	2.17	3.32	5.54	7.39	2.37	3.72	6.03	8.41
9	12	1.51	2.20	3.48	4.78	1.90	2.72	4.35	5.84	2.26	3.36	5.42	7.18	2.47	3.80	6.02	8.27
	16	1.43	2.11	3.40	4.69	1.81	2.63	4.26	5.75	2.17	3.26	5.32	7.08	2.37	3.69	5.92	8.16
	24	1.27	1.95	3.24	4.52	1.64	2.45	4.09	5.57	1.98	3.07	5.13	6.88	2.18	3.49	5.72	7.95
10	12	1.40	2.07	3.27	4.47	1.77	2.55	4.06	5.46	2.11	3.16	5.04	6.68	2.31	3.60	5.69	7.77
	16	1.30	1.96	3.17	4.37	1.66	2.44	3.95	5.34	2.00	3.03	4.92	6.56	2.20	3.47	5.57	7.63
	24	1.11	1.76	2.98	4.16	1.45	2.22	3.74	5.12	1.77	2.80	4.68	6.32	1.97	3.22	5.32	7.37
12	12	1.15	1.75	2.75	3.73	1.46	2.16	3.39	4.53	1.78	2.68	4.18	5.55	1.97	3.14	4.91	6.49
	16	1.02	1.61	2.62	3.59	1.31	2.01	3.24	4.38	1.62	2.52	4.03	5.39	1.81	2.96	4.73	6.31
	24	0.78[3]	1.35[4]	2.38	3.33	1.05[4]	1.73	2.98	4.10	1.33	2.22	3.73	5.08	1.52	2.62	4.40	5.96
14	12	0.88[4]	1.41	2.20	2.95	1.13	1.74	2.69	3.56	1.42	2.18	3.31	4.37	1.60	2.58	3.91	5.14
	16	0.73[3]	1.24[4]	2.05	2.79	0.97[3]	1.57	2.53	3.39	1.23[4]	1.99	3.14	4.19	1.41	2.37	3.71	4.94
	24	0.47[2]	0.95[3]	1.78[3]	2.51[4]	0.68[3]	1.26[3]	2.23[4]	3.09	0.91[3]	1.64[4]	2.81	3.85	1.07[3]	1.98[4]	3.34	4.56
16	12	0.64[3]	1.07[3]	1.72	2.29	0.84[3]	1.35[4]	2.10	2.77	1.07[4]	1.70	2.59	3.40	1.25[4]	2.03	3.06	4.03
	16	0.48[2]	0.90[3]	1.56[3]	2.13[4]	0.67[3]	1.16[3]	1.93[4]	2.60	0.88[3]	1.50[4]	2.41	3.22	1.04[3]	1.81[4]	2.85	3.82
	24	0.21[1]	0.60[2]	1.29[3]	1.84[3]	0.38[2]	0.84[2]	1.64[3]	2.29[3]	0.55[2]	1.15[3]	2.08[3]	2.88[4]	0.69[2]	1.41[3]	2.48[3]	3.44[4]

15 psf Lateral Load

4" MEMBERS

Wall Height (ft)	Stud Spacing (in.) o.c.	400S137				400S162				400S200				400S250			
		33 ksi		50 ksi		33 ksi		50 ksi		33 ksi		50 ksi		33 ksi		50 ksi	
		33	43	54	68	33	43	54	68	33	43	54	68	33	43	54	68
8	12	1.22	1.92	3.29	4.59	1.61	2.44	4.20	5.75	1.95	3.09	5.31	7.16	2.15	3.49	5.80	8.17
	16	1.04	1.73	3.12	4.40	1.41	2.24	4.00	5.55	1.74	2.87	5.10	6.94	1.94	3.26	5.58	7.94
	24	0.69	1.37	2.78	4.04	1.03	1.85	3.63	5.16	1.33	2.45	4.67	6.52	1.53	2.81	5.15	7.48
9	12	1.04	1.71	3.02	4.28	1.39	2.19	3.84	5.31	1.71	2.79	4.85	6.60	1.91	3.19	5.43	7.64
	16	0.82	1.48	2.80	4.05	1.15	1.94	3.60	5.06	1.45	2.52	4.59	6.33	1.65	2.90	5.15	7.34
	24	0.41[4]	1.05	2.39	3.60	0.71[4]	1.48	3.15	4.58	0.97	2.02	4.08	5.80	1.16	2.36	4.61	6.77
10	12	0.84	1.48	2.71	3.87	1.16	1.92	3.45	4.81	1.46	2.47	4.35	5.98	1.65	2.86	4.97	7.00
	16	0.59[4]	1.21	2.46	3.60	0.89	1.63	3.17	4.51	1.16	2.16	4.04	5.66	1.35	2.53	4.63	6.64
	24	0.14[3]	0.72[3]	1.99[4]	3.09	0.40[3]	1.11[4]	2.65	3.96	0.62[3]	1.58	3.46	5.05	0.79[4]	1.90	4.01	5.97
12	12	0.46[3]	1.00[4]	2.04	2.97	0.70[4]	1.36	2.61	3.71	0.95[4]	1.80	3.32	4.65	1.12	2.16	3.95	5.49
	16	0.17[3]	0.69[3]	1.74[4]	2.65	0.39[3]	1.02[3]	2.28[4]	3.36	0.60[3]	1.43[4]	2.96	4.27	0.75[3]	1.75	3.53	5.06
	24		0.13[2]	1.20[3]	2.06[3]		0.42[3]	1.70[3]	2.72[3]		0.77[3]	2.30[3]	3.57[4]	0.11[3]	1.01[3]	2.79[4]	4.28
14	12	0.13[2]	0.57[3]	1.43[3]	2.13[4]	0.31[3]	0.85[3]	1.85[3]	2.68	0.49[3]	1.20[3]	2.39[4]	3.41	0.63[3]	1.48[4]	2.86	4.06
	16		0.24[2]	1.11[3]	1.79[3]		0.49[3]	1.51[3]	2.32[3]	0.13[2]	0.80[3]	2.01[3]	3.01[4]	0.24[3]	1.03[3]	2.43[3]	3.61
	24			0.57[2]	1.21[2]			0.92[2]	1.69[3]		0.12[2]	1.35[2]	2.32[3]		0.26[2]	1.69[3]	2.83[3]
16	12		0.22[2]	0.94[2]	1.47[3]		0.43[2]	1.26[3]	1.90[3]	0.13[2]	0.70[3]	1.66[3]	2.45[3]	0.23[2]	0.90[3]	2.01[3]	2.94[4]
	16			0.63[2]	1.15[2]			0.93[2]	1.55[3]		0.31[2]	1.30[2]	2.07[3]		0.46[2]	1.59[3]	2.51[3]
	24			0.11[1]	0.60[1]			0.37[1]	0.96[2]			0.67[1]	1.41[2]			0.88[2]	1.76[2]

20 psf Lateral Load

4" MEMBERS

Wall Height (ft)	Stud Spacing (in.) o.c.	400S137				400S162				400S200				400S250			
		33 ksi		50 ksi		33 ksi		50 ksi		33 ksi		50 ksi		33 ksi		50 ksi	
		33	43	54	68	33	43	54	68	33	43	54	68	33	43	54	68
8	12	1.04	1.73	3.12	4.40	1.41	2.24	4.00	5.55	1.74	2.87	5.10	6.94	1.94	3.26	5.58	7.94
	16	0.81	1.49	2.89	4.16	1.16	1.98	3.75	5.29	1.46	2.59	4.81	6.66	1.66	2.96	5.29	7.63
	24	0.37[4]	1.03	2.45	3.70	0.68	1.48	3.27	4.78	0.95	2.04	4.27	6.10	1.14	2.38	4.73	7.03
9	12	0.82	1.48	2.80	4.05	1.15	1.94	3.60	5.06	1.45	2.52	4.59	6.33	1.65	2.90	5.15	7.34
	16	0.55[4]	1.19	2.52	3.75	0.85	1.63	3.30	4.73	1.13	2.18	4.24	5.97	1.32	2.54	4.79	6.95
	24		0.65[3]	2.01	3.19	0.30[3]	1.05[4]	2.72	4.12	0.53[4]	1.55	3.60	5.31	0.70[4]	1.86	4.11	6.22
10	12	0.59[4]	1.21	2.46	3.60	0.89	1.63	3.17	4.51	1.16	2.16	4.04	5.66	1.35	2.53	4.63	6.64
	16	0.29[3]	0.88[4]	2.14	3.25	0.55[3]	1.28	2.82	4.14	0.80[4]	1.77	3.65	5.25	0.97	2.10	4.21	6.18
	24		0.28[3]	1.55[3]	2.62[4]		0.63[3]	2.17[4]	3.45	0.13[3]	1.06[3]	2.93	4.49	0.28[3]	1.33[4]	3.43	5.34
12	12	0.17[3]	0.69[3]	1.74[4]	2.65	0.39[3]	1.02[3]	2.28[4]	3.36	0.60[3]	1.43[4]	2.96	4.27	0.75[3]	1.75	3.53	5.06
	16		0.31[3]	1.37[3]	2.25[3]		0.61[3]	1.88[3]	2.93[4]	0.18[3]	0.98[3]	2.51[4]	3.79	0.32[3]	1.25[3]	3.03[4]	4.53
	24			0.73[2]	1.54[3]			1.18[2]	2.16[3]		0.19[2]	1.72[3]	2.95[3]		0.36[3]	2.13[3]	3.58[3]
14	12		0.24[2]	1.11[3]	1.79[3]		0.49[3]	1.51[3]	2.32[3]	0.13[2]	0.80[3]	2.01[3]	3.01[4]	0.24[3]	1.03[3]	2.43[3]	3.61
	16			0.74[2]	1.40[2]			1.11[2]	1.89[3]		0.33[2]	1.56[3]	2.54[3]		0.51[3]	1.92[3]	3.08[3]
	24			0.10[1]	0.71[1]			0.41[1]	1.15[2]			0.78[2]	1.71[2]			1.04[2]	2.14[3]
16	12			0.63[2]	1.15[2]			0.93[2]	1.55[3]		0.31[2]	1.30[2]	2.07[3]		0.46[2]	1.59[3]	2.51[3]
	16			0.27[1]	0.77[1]			0.55[1]	1.14[2]			0.87[2]	1.62[2]			1.11[2]	2.00[3]
	24				0.13[1]				0.44[1]			0.14[1]	0.85[1]			0.27[1]	1.12[2]

NOTE: See page 30 for Table Notes.

COMBINED AXIAL AND LATERAL LOADS

25 psf Lateral Load

4" MEMBERS

Wall Height (ft)	Stud Spacing (in.) o.c.	400S137				400S162				400S200				400S250			
		33 ksi		50 ksi		33 ksi		50 ksi		33 ksi		50 ksi		33 ksi		50 ksi	
		33	43	54	68	33	43	54	68	33	43	54	68	33	43	54	68
8	12	0.86	1.55	2.95	4.22	1.22	2.04	3.81	5.35	1.53	2.66	4.88	6.73	1.73	3.03	5.36	7.70
	16	0.58	1.25	2.67	3.92	0.91	1.73	3.51	5.03	1.20	2.31	4.54	6.38	1.40	2.67	5.01	7.33
	24		0.70[4]	2.14	3.36	0.34[4]	1.13	2.92	4.41	0.58[4]	1.66	3.88	5.70	0.76	1.97	4.33	6.60
9	12	0.61	1.26	2.59	3.82	0.93	1.71	3.37	4.81	1.21	2.27	4.33	6.06	1.40	2.63	4.88	7.05
	16	0.29[3]	0.91[4]	2.26	3.46	0.57[4]	1.33	3	4.42	0.82	1.86	3.92	5.63	1.00	2.19	4.44	6.58
	24		0.28[3]	1.64[3]	2.79[4]		0.65[3]	2.32[4]	3.7	0.12[3]	1.10[4]	3.15	4.84	0.27[3]	1.38	3.63	5.71
10	12	0.36[3]	0.96[4]	2.22	3.34	0.63[4]	1.36	2.9	4.23	0.88[4]	1.86	3.75	5.35	1.06	2.21	4.31	6.29
	16		0.57[3]	1.84[4]	2.93	0.24[3]	0.94[4]	2.49	3.78	0.45[3]	1.40[4]	3.28	4.86	0.62[4]	1.71	3.81	5.75
	24			1.15[3]	2.18[3]		0.19[3]	1.73[3]	2.97[4]		0.57[3]	2.44[3]	3.97[4]		0.80[3]	2.89[4]	4.76
12	12		0.40[3]	1.46[3]	2.34[4]	0.11[3]	0.71[3]	1.98[3]	3.03[4]	0.28[3]	1.09[3]	2.62[4]	3.91	0.42[3]	1.37[4]	3.15	4.65
	16			1.04[3]	1.88[3]		0.23[2]	1.52[3]	2.53[3]		0.57[3]	2.10[3]	3.36[4]		0.79[3]	2.56[3]	4.04[4]
	24			0.30[2]	1.08[2]			0.71[2]	1.65[2]			1.19[2]	2.39[3]			1.54[3]	2.94[3]
14	12			0.83[2]	1.49[3]		0.17[2]	1.21[2]	2.00[3]		0.45[2]	1.67[3]	2.65[3]		0.63[3]	2.04[3]	3.20[4]
	16			0.40[1]	1.04[2]			0.75[2]	1.50[2]			1.16[2]	2.11[3]			1.46[2]	2.59[3]
	24				0.25[1]				0.66[1]			0.28[1]	1.17[2]			0.46[1]	1.52[2]
16	12			0.36[1]	0.87[2]			0.64[2]	1.24[2]			0.97[2]	1.73[2]			1.22[2]	2.12[3]
	16				0.44[1]			0.20[1]	0.78[1]			0.49[1]	1.21[2]			0.67[1]	1.54[2]
	24												0.34[1]				0.54[1]

30 psf Lateral Load

4" MEMBERS

Wall Height (ft)	Stud Spacing (in.) o.c.	400S137				400S162				400S200				400S250			
		33 ksi		50 ksi		33 ksi		50 ksi		33 ksi		50 ksi		33 ksi		50 ksi	
		33	43	54	68	33	43	54	68	33	43	54	68	33	43	54	68
8	12	0.69	1.37	2.78	4.04	1.03	1.85	3.63	5.16	1.33	2.45	4.67	6.52	1.53	2.81	5.15	7.48
	16	0.37[4]	1.03	2.45	3.70	0.68	1.48	3.27	4.78	0.95	2.04	4.27	6.10	1.14	2.38	4.73	7.03
	24		0.39[3]	1.84[4]	3.04		0.79[4]	2.59	4.06	0.24[3]	1.29	3.51	5.32	0.40[4]	1.58	3.94	6.18
9	12	0.41[4]	1.05	2.39	3.60	0.71[4]	1.48	3.15	4.58	0.97	2.02	4.08	5.80	1.16	2.36	4.61	6.77
	16		0.65[3]	2.01	3.19	0.30[3]	1.05[4]	2.72	4.12	0.53[4]	1.55	3.60	5.31	0.70[4]	1.86	4.11	6.22
	24			1.30[3]	2.42[3]		0.26[3]	1.94[3]	3.29[4]		0.68[3]	2.73[4]	4.39		0.92[4]	3.17	5.21
10	12	0.14[3]	0.72[3]	1.99[4]	3.09	0.40[3]	1.11[4]	2.65	3.96	0.62[3]	1.58	3.46	5.05	0.79[4]	1.90	4.01	5.97
	16		0.28[3]	1.55[3]	2.62[4]		0.63[3]	2.17[4]	3.45	0.13[3]	1.06[3]	2.93	4.49	0.28[3]	1.33[4]	3.43	5.34
	24			0.78[2]	1.77[3]			1.32[3]	2.53[3]		0.11[3]	1.98[3]	3.48[3]		0.30[3]	2.39[3]	4.21[4]
12	12		0.13[2]	1.20[3]	2.06[3]		0.42[3]	1.70[3]	2.72[3]		0.77[3]	2.30[3]	3.57[4]	0.11[3]	1.01[3]	2.79[4]	4.28
	16			0.73[2]	1.54[3]			1.18[2]	2.16[3]		0.19[2]	1.72[3]	2.95[3]		0.36[3]	2.13[3]	3.58[3]
	24				0.64[2]			0.27[1]	1.18[2]			0.71[2]	1.87[2]			0.98[2]	2.36[3]
14	12			0.57[2]	1.21[2]			0.92[2]	1.69[3]		0.12[2]	1.35[2]	2.32[3]		0.26[2]	1.69[3]	2.83[3]
	16			0.10[1]	0.71[1]			0.41[1]	1.15[2]			0.78[2]	1.71[2]			1.04[2]	2.14[3]
	24								0.21[1]				0.67[1]				0.96[2]
16	12			0.11[1]	0.60[1]			0.37[1]	0.96[2]			0.67[1]	1.41[2]			0.88[2]	1.76[2]
	16				0.13[1]				0.44[1]			0.14[1]	0.85[1]			0.27[1]	1.12[2]
	24																

35 psf Lateral Load

4" MEMBERS

Wall Height (ft)	Stud Spacing (in.) o.c.	400S137				400S162				400S200				400S250			
		33 ksi		50 ksi		33 ksi		50 ksi		33 ksi		50 ksi		33 ksi		50 ksi	
		33	43	54	68	33	43	54	68	33	43	54	68	33	43	54	68
8	12	0.53	1.20	2.61	3.87	0.85	1.66	3.45	4.97	1.14	2.24	4.47	6.31	1.33	2.59	4.94	7.25
	16	0.16[3]	0.81	2.24	3.47	0.45[4]	1.25	3.04	4.54	0.70	1.79	4.01	5.83	0.89	2.11	4.46	6.74
	24			1.55[3]	2.73		0.47[3]	2.27[4]	3.72		0.93[4]	3.15	4.94		1.20	3.57	5.77
9	12	0.23[3]	0.85[4]	2.20	3.39	0.50[4]	1.26	2.93	4.35	0.75[4]	1.78	3.84	5.55	0.93	2.11	4.36	6.49
	16		0.40[3]	1.76[4]	2.92		0.78[3]	2.45	3.84	0.25[3]	1.25[4]	3.30	4.99	0.41[3]	1.54	3.79	5.88
	24			0.97[3]	2.06[3]			1.58[3]	2.90[3]		0.28[3]	2.32[3]	3.96[4]		0.49[3]	2.74[4]	4.74
10	12		0.50[3]	1.77[4]	2.85	0.17[3]	0.86[3]	2.41[4]	3.70	0.37[3]	1.31[4]	3.19	4.77	0.53[3]	1.61	3.71	5.65
	16			1.28[3]	2.32[3]		0.33[3]	1.88[3]	3.13[4]		0.73[3]	2.60[4]	4.14		0.97[3]	3.07[4]	4.95
	24			0.42[2]	1.38[3]			0.93[2]	2.10[3]			1.54[3]	3.01[3]			1.91[3]	3.69[3]
12	12			0.96[2]	1.80[3]		0.15[2]	1.43[3]	2.44[3]		0.47[3]	2.00[3]	3.25[3]		0.68[3]	2.45[3]	3.92[4]
	16			0.44[2]	1.23[2]			0.86[2]	1.82[3]			1.36[2]	2.57[3]			1.73[3]	3.15[3]
	24				0.24[1]				0.74[2]			0.26[1]	1.38[2]			0.47[2]	1.81[2]
14	12			0.32[1]	0.95[2]			0.66[2]	1.41[2]			1.06[2]	2.01[3]			1.35[2]	2.47[3]
	16				0.40[1]			0.10[1]	0.82[1]			0.44[1]	1.35[2]			0.65[2]	1.72[2]
	24												0.21[1]				0.44[1]
16	12				0.36[1]			0.12[1]	0.69[1]			0.39[1]	1.12[2]			0.57[1]	1.43[2]
	16								0.14[1]				0.50[1]				0.73[1]
	24																

NOTE: See page 30 for Table Notes.

For more information, please contact Marino\WARE® Technical Services at 866.545.1545
This technical information reflects the most current information available and supersedes any and all previous publications effective February 17, 2023 | MW-Cold Formed Catalog | © WARE Industries, Inc., 2023

COMBINED AXIAL AND LATERAL LOADS

40 psf Lateral Load

4" MEMBERS

Wall Height (ft)	Stud Spacing (in.) o.c.	400S137				400S162				400S200				400S250			
		33 ksi		50 ksi		33 ksi		50 ksi		33 ksi		50 ksi		33 ksi		50 ksi	
		33	43	54	68	33	43	54	68	33	43	54	68	33	43	54	68
8	12	0.37[4]	1.03	2.45	3.70	0.68	1.48	3.27	4.78	0.95	2.04	4.27	6.10	1.14	2.38	4.73	7.03
	16		0.60[4]	2.04	3.26	0.23[3]	1.02	2.81	4.30	0.47[4]	1.53	3.76	5.57	0.64	1.84	4.20	6.46
	24			1.27[3]	2.43[4]		0.15[3]	1.96[4]	3.39		0.59[3]	2.80[4]	4.58		0.83[4]	3.20	5.38
9	12		0.65[3]	2.01	3.19	0.30[3]	1.05[4]	2.72	4.12	0.53[4]	1.55	3.60	5.31	0.70[4]	1.86	4.11	6.22
	16		0.16[3]	1.53[3]	2.66[4]		0.52[3]	2.19[4]	3.56		0.96[4]	3.01	4.69	0.14[3]	1.22[4]	3.48	5.54
	24			0.65[3]	1.71[3]			1.23[3]	2.52[3]			1.93[3]	3.55[4]			2.32[3]	4.28[4]
10	12		0.28[3]	1.55[3]	2.62[4]		0.63[3]	2.17[4]	3.45	0.13[3]	1.06[3]	2.93	4.49	0.28[3]	1.33[4]	3.43	5.34
	16			1.03[3]	2.04[3]			1.59[3]	2.82[3]		0.41[3]	2.28[3]	3.80[4]		0.63[3]	2.72[4]	4.57
	24				1.01[2]			0.56[2]	1.70[3]			1.12[3]	2.57[3]			1.45[3]	3.19[3]
12	12			0.73[2]	1.54[3]			1.18[2]	2.16[3]		0.19[2]	1.72[3]	2.95[3]		0.36[3]	2.13[3]	3.58[3]
	16			0.16[1]	0.93[2]			0.56[2]	1.49[2]			1.03[2]	2.21[3]			1.35[2]	2.74[3]
	24								0.33[1]				0.92[2]				1.29[2]
14	12			0.10[1]	0.71[1]			0.41[1]	1.15[2]			0.78[2]	1.71[2]			1.04[2]	2.14[3]
	16				0.11[1]				0.50[1]			0.12[1]	1.00[2]			0.28[1]	1.33[2]
	24																
16	12				0.13[1]				0.44[1]			0.14[1]	0.85[1]			0.27[1]	1.12[2]
	16												0.18[1]				0.36[1]
	24																

50 psf Lateral Load

4" MEMBERS

Wall Height (ft)	Stud Spacing (in.) o.c.	400S137				400S162				400S200				400S250			
		33 ksi		50 ksi		33 ksi		50 ksi		33 ksi		50 ksi		33 ksi		50 ksi	
		33	43	54	68	33	43	54	68	33	43	54	68	33	43	54	68
8	12		0.70[4]	2.14	3.36	0.34[4]	1.13	2.92	4.41	0.58[4]	1.66	3.88	5.70	0.76	1.97	4.33	6.60
	16		0.19[3]	1.65[4]	2.84		0.57[3]	2.37	3.83		1.05[4]	3.27	5.06	0.17[3]	1.32	3.69	5.91
	24			0.73[3]	1.85[3]			1.36[3]	2.75[3]			2.13[3]	3.88[4]		0.12[3]	2.50[4]	4.61
9	12		0.28[3]	1.64[3]	2.79[4]		0.65[3]	2.32[4]	3.70	0.12[3]	1.10[4]	3.15	4.84	0.27[3]	1.38	3.63	5.71
	16			1.08[3]	2.17[3]			1.70[3]	3.03[4]		0.41[3]	2.45[3]	4.10		0.63[3]	2.88[4]	4.89
	24				1.06[2]			0.57[2]	1.81[3]			1.19[3]	2.76[3]			1.52[3]	3.41[3]
10	12			1.15[3]	2.18[3]		0.19[3]	1.73[3]	2.97[4]		0.57[3]	2.44[3]	3.97[4]		0.80[3]	2.89[4]	4.76
	16			0.54[2]	1.51[3]			1.06[3]	2.24[3]			1.68[3]	3.16[3]			2.07[3]	3.86[4]
	24				0.32[2]				0.94[2]			0.34[2]	1.73[2]			0.59[2]	2.25[3]
12	12			0.30[2]	1.08[2]			0.71[2]	1.65[2]			1.19[2]	2.39[3]			1.54[3]	2.94[3]
	16				0.37[1]				0.89[2]			0.40[2]	1.54[2]			0.64[2]	1.99[2]
	24																0.33[1]
14	12				0.25[1]				0.66[1]			0.28[1]	1.17[2]			0.46[1]	1.52[2]
	16												0.36[1]				0.61[1]
	24																
16	12												0.34[1]				0.54[1]
	16																
	24																

5 psf Lateral Load (Interior Walls)

6" MEMBERS

Wall Height (ft)	Stud Spacing (in.) o.c.	600S137					600S162					600S200					600S250				
		33 ksi		50 ksi			33 ksi		50 ksi			33 ksi		50 ksi			33 ksi		50 ksi		
		33	43	54	68	97	33	43	54	68	97	33	43	54	68	97	33	43	54	68	97
8	12	1.76	2.50	3.80	5.04	7.53	2.41	3.38	5.59	7.42	11.4	2.82	4.30	7.45	9.95	15.6	3.06	4.65	7.63	11.0	18.2
	16	1.72	2.46	3.77	5.00	7.50	2.36	3.33	5.54	7.38	11.3	2.77	4.25	7.40	9.89	15.6	3.01	4.59	7.58	11.0	18.2
	24	1.64	2.38	3.70	4.94	7.43	2.27	3.24	5.45	7.29	11.2	2.68	4.14	7.29	9.79	15.5	2.91	4.49	7.48	10.9	18.1
9	12	1.73	2.46	3.77	5.01	7.50	2.37	3.34	5.55	7.38	11.3	2.76	4.22	7.30	9.76	15.4	2.99	4.57	7.49	10.8	17.9
	16	1.68	2.41	3.72	4.96	7.46	2.31	3.28	5.49	7.32	11.3	2.70	4.15	7.23	9.70	15.3	2.93	4.50	7.43	10.8	17.8
	24	1.57	2.31	3.64	4.88	7.37	2.18	3.16	5.37	7.21	11.2	2.57	4.01	7.10	9.56	15.1	2.80	4.36	7.30	10.6	17.7
10	12	1.69	2.42	3.73	4.97	7.46	2.32	3.29	5.50	7.33	11.3	2.69	4.11	7.12	9.54	15.0	2.91	4.47	7.33	10.6	17.4
	16	1.62	2.36	3.68	4.92	7.41	2.24	3.21	5.42	7.26	11.2	2.61	4.03	7.03	9.45	14.9	2.83	4.38	7.25	10.5	17.3
	24	1.49	2.23	3.57	4.81	7.30	2.09	3.06	5.27	7.11	11.0	2.46	3.86	6.86	9.28	14.7	2.68	4.21	7.08	10.3	17.2
12	12	1.59	2.32	3.64	4.88	7.37	2.15	3.11	5.30	7.20	11.1	2.51	3.86	6.65	8.95	14.1	2.72	4.23	6.92	10.0	16.3
	16	1.49	2.23	3.56	4.79	7.29	2.04	3.00	5.19	7.08	11.0	2.40	3.74	6.52	8.82	14.0	2.61	4.10	6.80	9.84	16.2
	24	1.30	2.04	3.39	4.63	7.12	1.82	2.78	4.97	6.85	10.8	2.18	3.50	6.28	8.57	13.7	2.38	3.86	6.56	9.57	15.9
14	12	1.46	2.20	3.52	4.75	7.24	1.93	2.86	4.87	6.70	10.9	2.28	3.53	6.05	8.19	13.0	2.49	3.92	6.43	9.23	15.0
	16	1.33	2.06	3.40	4.63	7.11	1.79	2.71	4.72	6.53	10.7	2.13	3.37	5.88	8.01	12.8	2.33	3.75	6.26	9.04	14.8
	24	1.08	1.80	3.16	4.39	6.87	1.50	2.42	4.42	6.22	10.3	1.85	3.05	5.55	7.67	12.4	2.04	3.42	5.93	8.68	14.4
16	12	1.32	2.04	3.36	4.58	7.05	1.68	2.56	4.34	6.00	9.75	2.02	3.16	5.35	7.29	11.6	2.22	3.57	5.92	8.40	13.4
	16	1.15	1.86	3.19	4.41	6.87	1.50	2.37	4.15	5.80	9.51	1.84	2.95	5.13	7.07	11.4	2.02	3.35	5.70	8.15	13.1
	24	0.83[3]	1.53	2.88	4.09	6.53	1.16[4]	2.01	3.78	5.41	9.05	1.49	2.57	4.73	6.64	10.9	1.66	2.94	5.29	7.69	12.6

NOTE: See page 30 for Table Notes.

COMBINED AXIAL AND LATERAL LOADS

15 psf Lateral Load

6" MEMBERS

Wall Height (ft)	Stud Spacing (in.) o.c.	600S137 33 ksi 33	600S137 33 ksi 43	600S137 50 ksi 54	600S137 50 ksi 68	600S137 50 ksi 97	600S162 33 ksi 33	600S162 33 ksi 43	600S162 50 ksi 54	600S162 50 ksi 68	600S162 50 ksi 97	600S200 33 ksi 33	600S200 33 ksi 43	600S200 50 ksi 54	600S200 50 ksi 68	600S200 50 ksi 97	600S250 33 ksi 33	600S250 33 ksi 43	600S250 50 ksi 54	600S250 50 ksi 68	600S250 50 ksi 97
8	12	1.52	2.26	3.59	4.84	7.33	2.12	3.10	5.32	7.16	11.1	2.53	3.99	7.13	9.63	15.3	2.76	4.33	7.33	10.7	17.9
	16	1.40	2.14	3.49	4.74	7.23	1.98	2.96	5.19	7.03	11.0	2.39	3.83	6.98	9.48	15.1	2.61	4.17	7.18	10.5	17.7
	24	1.16	1.91	3.29	4.54	7.04	1.70	2.68	4.93	6.77	10.7	2.10	3.53	6.67	9.16	14.8	2.32	3.86	6.88	10.2	17.4
9	12	1.42	2.16	3.50	4.75	7.24	2.00	2.98	5.20	7.04	11.0	2.39	3.82	6.89	9.36	14.9	2.61	4.16	7.10	10.4	17.4
	16	1.26	2.01	3.37	4.62	7.12	1.82	2.80	5.03	6.87	10.8	2.21	3.62	6.69	9.15	14.7	2.42	3.96	6.91	10.2	17.2
	24	0.97	1.71	3.11	4.36	6.86	1.47	2.45	4.69	6.53	10.5	1.85	3.23	6.30	8.76	14.3	2.05	3.56	6.53	9.78	16.7
10	12	1.30	2.04	3.40	4.64	7.14	1.86	2.84	5.06	6.89	10.8	2.23	3.62	6.61	9.03	14.5	2.44	3.96	6.84	10.1	16.9
	16	1.11	1.85	3.24	4.48	6.98	1.64	2.62	4.84	6.68	10.6	2.01	3.38	6.36	8.78	14.2	2.21	3.71	6.60	9.79	16.6
	24	0.75	1.49	2.91	4.16	6.66	1.21	2.19	4.42	6.25	10.2	1.58	2.91	5.88	8.28	13.7	1.77	3.23	6.13	9.27	16.0
12	12	1.03	1.77	3.14	4.38	6.87	1.50	2.46	4.64	6.52	10.4	1.86	3.15	5.91	8.20	13.3	2.05	3.50	6.21	9.19	15.5
	16	0.77	1.50	2.90	4.14	6.63	1.20	2.15	4.33	6.20	10.1	1.55	2.81	5.56	7.84	12.9	1.74	3.15	5.87	8.81	15.1
	24	0.28[4]	1.00	2.44	3.68	6.15	0.64	1.57	3.74	5.57	9.40	0.97	2.18	4.90	7.15	12.2	1.13	2.49	5.21	8.08	14.2
14	12	0.73	1.44	2.82	4.04	6.51	1.11	2.01	4.00	5.77	9.8	1.44	2.61	5.08	7.18	11.9	1.61	2.95	5.47	8.16	13.8
	16	0.40[4]	1.10	2.50	3.71	6.17	0.74	1.62	3.60	5.35	9.30	1.06	2.19	4.64	6.71	11.3	1.22	2.51	5.03	7.66	13.2
	24		0.46[3]	1.90[4]	3.09	5.51		0.91[4]	2.87	4.56	8.38	0.36[3]	1.41	3.82	5.85	10.4	0.48[4]	1.69	4.20	6.73	12.2
16	12	0.41[3]	1.08	2.45	3.63	6.04	0.70[4]	1.52	3.29	4.87	8.41	1.01	2.04	4.18	6.06	10.2	1.16	2.37	4.71	7.05	11.9
	16		0.67[3]	2.05[4]	3.21	5.59	0.29[3]	1.08[4]	2.83	4.37	7.83	0.57[3]	1.55	3.68	5.51	9.59	0.70[4]	1.85	4.17	6.45	11.2
	24			1.32[3]	2.45[3]	4.76		0.28[3]	2.01[3]	3.48[4]	6.77		0.68[3]	2.77[4]	4.53	8.46		0.91[3]	3.21[4]	5.37	10.0

20 psf Lateral Load

6" MEMBERS

Wall Height (ft)	Stud Spacing (in.) o.c.	600S137 33 ksi 33	600S137 33 ksi 43	600S137 50 ksi 54	600S137 50 ksi 68	600S137 50 ksi 97	600S162 33 ksi 33	600S162 33 ksi 43	600S162 50 ksi 54	600S162 50 ksi 68	600S162 50 ksi 97	600S200 33 ksi 33	600S200 33 ksi 43	600S200 50 ksi 54	600S200 50 ksi 68	600S200 50 ksi 97	600S250 33 ksi 33	600S250 33 ksi 43	600S250 50 ksi 54	600S250 50 ksi 68	600S250 50 ksi 97
8	12	1.40	2.14	3.49	4.74	7.23	1.98	2.96	5.19	7.03	11.0	2.39	3.83	6.98	9.48	15.1	2.61	4.17	7.18	10.5	17.7
	16	1.24	1.98	3.36	4.60	7.10	1.80	2.78	5.01	6.85	10.8	2.20	3.63	6.77	9.27	14.9	2.41	3.96	6.98	10.3	17.5
	24	0.93	1.68	3.09	4.34	6.85	1.43	2.41	4.67	6.51	10.4	1.82	3.22	6.36	8.86	14.5	2.03	3.55	6.58	9.90	17.0
9	12	1.26	2.01	3.37	4.62	7.12	1.82	2.80	5.03	6.87	10.8	2.21	3.62	6.69	9.15	14.7	2.42	3.96	6.91	10.2	17.2
	16	1.06	1.81	3.20	4.45	6.95	1.59	2.57	4.80	6.64	10.6	1.97	3.36	6.43	8.89	14.4	2.18	3.69	6.66	9.92	16.9
	24	0.67	1.42	2.86	4.11	6.62	1.13	2.11	4.36	6.20	10.1	1.50	2.85	5.91	8.37	13.9	1.69	3.17	6.16	9.37	16.3
10	12	1.11	1.85	3.24	4.48	6.98	1.64	2.62	4.84	6.68	10.6	2.01	3.38	6.36	8.78	14.2	2.21	3.71	6.60	9.79	16.6
	16	0.87	1.61	3.02	4.27	6.77	1.35	2.33	4.56	6.39	10.3	1.72	3.06	6.04	8.45	13.9	1.91	3.39	6.29	9.44	16.2
	24	0.40	1.14	2.60	3.85	6.35	0.81	1.78	4.01	5.84	9.7	1.16	2.45	5.41	7.80	13.2	1.33	2.76	5.68	8.77	15.5
12	12	0.77	1.50	2.90	4.14	6.63	1.20	2.15	4.33	6.20	10.1	1.55	2.81	5.56	7.84	12.9	1.74	3.15	5.87	8.81	15.1
	16	0.44	1.16	2.60	3.83	6.31	0.82	1.76	3.93	5.78	9.62	1.16	2.38	5.12	7.37	12.4	1.33	2.70	5.43	8.32	14.5
	24		0.52[4]	2.01	3.23	5.70	0.11[3]	1.02	3.17	4.98	8.76	0.43[4]	1.57	4.27	6.49	11.5	0.57	1.86	4.59	7.39	13.5
14	12	0.40[4]	1.10	2.50	3.71	6.17	0.74	1.62	3.60	5.35	9.30	1.06	2.19	4.64	6.71	11.3	1.22	2.51	5.03	7.66	13.2
	16		0.67[4]	2.10	3.30	5.73	0.28[3]	1.14[4]	3.11	4.82	8.68	0.59[4]	1.66	4.08	6.13	10.7	0.72[4]	1.95	4.47	7.04	12.5
	24			1.35[3]	2.52[4]	4.90		0.26[3]	2.20[3]	3.83	7.53		0.70[3]	3.07[4]	5.05	9.47		0.93[4]	3.44	5.88	11.2
16	12		0.67[3]	2.05[4]	3.21	5.59	0.29[3]	1.08[4]	2.83	4.37	7.83	0.57[3]	1.55	3.68	5.51	9.59	0.70[4]	1.85	4.17	6.45	11.2
	16		0.17[3]	1.55[3]	2.69[4]	5.03		0.53[3]	2.27[3]	3.76	7.11		0.96[3]	3.06[4]	4.85	8.82	0.14[3]	1.21[4]	3.52	5.72	10.4
	24			0.68[2]	1.76[3]	4.00[3]			1.28[3]	2.68[3]	5.83[4]			1.96[3]	3.66[3]	7.45			2.34[3]	4.40[4]	8.88

25 psf Lateral Load

6" MEMBERS

Wall Height (ft)	Stud Spacing (in.) o.c.	600S137 33 ksi 33	600S137 33 ksi 43	600S137 50 ksi 54	600S137 50 ksi 68	600S137 50 ksi 97	600S162 33 ksi 33	600S162 33 ksi 43	600S162 50 ksi 54	600S162 50 ksi 68	600S162 50 ksi 97	600S200 33 ksi 33	600S200 33 ksi 43	600S200 50 ksi 54	600S200 50 ksi 68	600S200 50 ksi 97	600S250 33 ksi 33	600S250 33 ksi 43	600S250 50 ksi 54	600S250 50 ksi 68	600S250 50 ksi 97
8	12	1.28	2.02	3.39	4.64	7.14	1.84	2.82	5.06	6.90	10.8	2.24	3.68	6.82	9.32	15.0	2.46	4.01	7.03	10.4	17.5
	16	1.08	1.83	3.22	4.47	6.97	1.61	2.59	4.84	6.68	10.6	2.01	3.42	6.56	9.06	14.7	2.22	3.75	6.78	10.1	17.2
	24	0.70	1.45	2.89	4.14	6.65	1.16	2.15	4.41	6.25	10.2	1.55	2.92	6.06	8.55	14.2	1.74	3.24	6.29	9.58	16.7
9	12	1.11	1.86	3.24	4.49	6.99	1.65	2.62	4.86	6.70	10.6	2.03	3.42	6.50	8.96	14.5	2.24	3.76	6.72	10.0	17.0
	16	0.87	1.61	3.03	4.28	6.78	1.36	2.34	4.58	6.42	10.3	1.74	3.11	6.17	8.63	14.2	1.93	3.43	6.41	9.64	16.6
	24	0.39	1.14	2.61	3.86	6.37	0.80	1.78	4.04	5.87	9.8	1.16	2.48	5.53	7.98	13.5	1.34	2.79	5.79	8.97	15.9
10	12	0.93	1.67	3.07	4.32	6.82	1.42	2.40	4.63	6.46	10.4	1.79	3.14	6.12	8.53	14.0	1.99	3.47	6.37	9.53	16.3
	16	0.63	1.37	2.81	4.06	6.56	1.08	2.05	4.29	6.11	10.0	1.44	2.75	5.72	8.12	13.5	1.62	3.07	5.98	9.11	15.8
	24		0.80	2.30	3.54	6.04	0.41	1.37	3.62	5.44	9.30	0.76	2.01	4.95	7.33	12.7	0.91	2.30	5.23	8.28	14.9
12	12	0.52	1.25	2.67	3.91	6.39	0.92	1.86	4.03	5.88	9.7	1.26	2.49	5.23	7.49	12.6	1.43	2.81	5.54	8.44	14.6
	16	0.13[4]	0.84	2.30	3.52	6.00	0.46[4]	1.38	3.55	5.37	9.19	0.79	1.97	4.68	6.92	11.9	0.94	2.27	5.00	7.85	14.0
	24			1.59[4]	2.80	5.25		0.50[4]	2.64	4.42	8.15		1.00[4]	3.67	5.86	10.8		1.26	3.99	6.72	12.7
14	12		0.77[4]	2.19	3.40	5.83	0.39[3]	1.25	3.23	4.95	8.83	0.70[4]	1.79	4.22	6.27	10.9	0.84	2.09	4.60	7.19	12.7
	16		0.27[3]	1.71[4]	2.90	5.31		0.68[3]	2.64[4]	4.31	8.09	0.14[3]	1.16[4]	3.56	5.57	10.1	0.25[3]	1.43	3.94	6.44	11.8
	24			0.83[3]	1.97[3]	4.32[4]			1.57[3]	3.16[3]	6.74			2.37[3]	4.30[4]	8.62		0.22[3]	2.72[3]	5.07	10.3
16	12		0.29[3]	1.67[3]	2.82[4]	5.16		0.67[3]	2.40[4]	3.91	7.28	0.17[3]	1.10[3]	3.21	5.01	9.01	0.28[3]	1.37[4]	3.68	5.90	10.6
	16			1.10[3]	2.21[3]	4.50[4]			1.75[3]	3.20[3]	6.45		0.41[3]	2.49[3]	4.23[4]	8.11		0.62[3]	2.91[4]	5.04	9.6
	24				1.13[2]	3.31[3]			0.61[2]	1.95[3]	4.96[3]			1.22[3]	2.85[3]	6.52[4]			1.55[3]	3.52[3]	7.87[4]

NOTE: See page 30 for Table Notes.

For more information, please contact Marino\WARE® Technical Services at 866.545.1545
This technical information reflects the most current information available and supersedes any and all previous publications effective February 17, 2023 | MW-Cold Formed Catalog | © WARE Industries, Inc., 2023

COMBINED AXIAL AND LATERAL LOADS

30 psf Lateral Load

6" MEMBERS

Wall Height (ft)	Stud Spacing (in.) o.c.	600S137 33 ksi 33	600S137 33 ksi 43	600S137 50 ksi 54	600S137 50 ksi 68	600S137 50 ksi 97	600S162 33 ksi 33	600S162 33 ksi 43	600S162 50 ksi 54	600S162 50 ksi 68	600S162 50 ksi 97	600S200 33 ksi 33	600S200 33 ksi 43	600S200 50 ksi 54	600S200 50 ksi 68	600S200 50 ksi 97	600S250 33 ksi 33	600S250 33 ksi 43	600S250 50 ksi 54	600S250 50 ksi 68	600S250 50 ksi 97
8	12	1.16	1.91	3.29	4.54	7.04	1.70	2.68	4.93	6.77	10.7	2.10	3.53	6.67	9.16	14.8	2.32	3.86	6.88	10.2	17.4
	16	0.93	1.68	3.09	4.34	6.85	1.43	2.41	4.67	6.51	10.4	1.82	3.22	6.36	8.86	14.5	2.03	3.55	6.58	9.90	17.0
	24	0.47	1.22	2.69	3.95	6.46	0.90	1.88	4.16	6.00	9.9	1.28	2.63	5.76	8.25	13.9	1.46	2.94	6.00	9.26	16.3
9	12	0.97	1.71	3.11	4.36	6.86	1.47	2.45	4.69	6.53	10.5	1.85	3.23	6.30	8.76	14.3	2.05	3.56	6.53	9.78	16.7
	16	0.67	1.42	2.86	4.11	6.62	1.13	2.11	4.36	6.20	10.1	1.50	2.85	5.91	8.37	13.9	1.69	3.17	6.16	9.37	16.3
	24	0.11	0.86	2.36	3.62	6.12	0.47	1.45	3.72	5.55	9.44	0.83	2.12	5.16	7.60	13.1	0.99	2.42	5.43	8.57	15.4
10	12	0.75	1.49	2.91	4.16	6.66	1.21	2.19	4.42	6.25	10.2	1.58	2.91	5.88	8.28	13.7	1.77	3.23	6.13	9.27	16.0
	16	0.40	1.14	2.60	3.85	6.35	0.81	1.78	4.01	5.84	9.7	1.16	2.45	5.41	7.80	13.2	1.33	2.76	5.68	8.77	15.5
	24		0.46	2.00	3.24	5.74		0.99	3.23	5.04	8.89	0.37	1.58	4.50	6.87	12.2	0.51	1.86	4.79	7.80	14.4
12	12	0.28[4]	1.00	2.44	3.68	6.15	0.64	1.57	3.74	5.57	9.40	0.97	2.18	4.90	7.15	12.2	1.13	2.49	5.21	8.08	14.2
	16		0.52[4]	2.01	3.23	5.70	0.11[3]	1.02	3.17	4.98	8.76	0.43[4]	1.57	4.27	6.49	11.5	0.57	1.86	4.59	7.39	13.5
	24			1.19[3]	2.39[4]	4.82			2.13[4]	3.88	7.56		0.46[3]	3.09[4]	5.26	10.1		0.69[4]	3.42	6.08	12.0
14	12		0.46[3]	1.90[4]	3.09	5.51		0.91[4]	2.87	4.56	8.38	0.36[3]	1.41	3.82	5.85	10.4	0.48[4]	1.69	4.20	6.73	12.2
	16			1.35[3]	2.52[4]	4.90		0.26[3]	2.20[3]	3.83	7.53		0.70[3]	3.07[4]	5.05	9.47		0.93[4]	3.44	5.88	11.2
	24			0.34[2]	1.46[3]	3.77[3]			0.99[3]	2.52[3]	6.00[4]			1.72[3]	3.60[3]	7.82			2.05[3]	4.32[4]	9.4
16	12			1.32[3]	2.45[3]	4.76		0.28[3]	2.01[3]	3.48[4]	6.77		0.68[3]	2.77[4]	4.53	8.46		0.91[3]	3.21[4]	5.37	10.0
	16			0.68[2]	1.76[3]	4.00[3]			1.28[3]	2.68[3]	5.83[4]			1.96[3]	3.66[3]	7.45			2.34[3]	4.40[4]	8.88
	24				0.55[2]	2.66[3]				1.27[2]	4.16[3]			0.54[2]	2.11[3]	5.66[3]			0.81[2]	2.69[3]	6.92[3]

35 psf Lateral Load

6" MEMBERS

Wall Height (ft)	Stud Spacing (in.) o.c.	600S137 33 ksi 33	600S137 33 ksi 43	600S137 50 ksi 54	600S137 50 ksi 68	600S137 50 ksi 97	600S162 33 ksi 33	600S162 33 ksi 43	600S162 50 ksi 54	600S162 50 ksi 68	600S162 50 ksi 97	600S200 33 ksi 33	600S200 33 ksi 43	600S200 50 ksi 54	600S200 50 ksi 68	600S200 50 ksi 97	600S250 33 ksi 33	600S250 33 ksi 43	600S250 50 ksi 54	600S250 50 ksi 68	600S250 50 ksi 97
8	12	1.04	1.79	3.19	4.44	6.94	1.57	2.55	4.80	6.64	10.6	1.96	3.37	6.51	9.01	14.6	2.17	3.70	6.73	10.1	17.2
	16	0.77	1.52	2.96	4.21	6.72	1.25	2.24	4.50	6.34	10.3	1.64	3.02	6.16	8.65	14.3	1.84	3.34	6.39	9.69	16.8
	24	0.25	1.00	2.50	3.76	6.27	0.64	1.62	3.91	5.75	9.66	1.01	2.34	5.46	7.95	13.5	1.18	2.64	5.71	8.95	16.0
9	12	0.82	1.56	2.99	4.24	6.74	1.30	2.28	4.53	6.36	10.3	1.68	3.04	6.10	8.56	14.1	1.87	3.37	6.34	9.58	16.5
	16	0.48	1.23	2.69	3.94	6.45	0.91	1.89	4.15	5.98	9.9	1.28	2.61	5.66	8.11	13.6	1.46	2.92	5.91	9.10	16.0
	24		0.58	2.12	3.37	5.88	0.16	1.13	3.41	5.23	9.11	0.51	1.77	4.79	7.23	12.7	0.66	2.05	5.07	8.18	15.0
10	12	0.57	1.31	2.76	4.00	6.50	1.01	1.98	4.22	6.05	9.9	1.37	2.68	5.64	8.04	13.4	1.55	2.99	5.90	9.02	15.7
	16	0.18	0.91	2.40	3.64	6.14	0.54	1.51	3.75	5.57	9.44	0.89	2.15	5.10	7.49	12.8	1.05	2.46	5.38	8.44	15.1
	24		0.14[4]	1.70	2.94	5.44		0.61	2.85	4.66	8.48		1.16	4.07	6.42	11.7	0.11	1.43	4.37	7.32	13.8
12	12		0.76	2.22	3.45	5.92	0.37[4]	1.29	3.45	5.28	9.08	0.70	1.87	4.58	6.81	11.8	0.85	2.17	4.90	7.73	13.8
	16		0.22[3]	1.73[4]	2.94	5.40		0.67[4]	2.82	4.61	8.35		1.19	3.86	6.07	11.0	0.21[4]	1.46	4.19	6.94	12.9
	24			0.80[3]	1.99[3]	4.40			1.64[3]	3.36[4]	6.99			2.54[4]	4.68	9.5		0.14[3]	2.87[4]	5.46	11.3
14	12		0.17[3]	1.62[3]	2.80	5.20		0.58[3]	2.53[4]	4.19	7.95		1.04[4]	3.44	5.44	9.9	0.14[3]	1.30[4]	3.81	6.30	11.7
	16			1.00[3]	2.15[3]	4.51			1.77[3]	3.38[4]	7.00		0.25[3]	2.60[3]	4.55[4]	8.90		0.45[3]	2.95[4]	5.34	10.6
	24				0.97[3]	3.24[3]			0.43[2]	1.92[3]	5.30[3]			1.11[3]	2.94[3]	7.06[4]			1.41[3]	3.60[3]	8.55
16	12			0.99[3]	2.10[3]	4.37[4]			1.63[3]	3.07[3]	6.29		0.28[3]	2.35[3]	4.08[4]	7.94		0.48[3]	2.76[3]	4.88	9.43
	16			0.28[2]	1.34[3]	3.53[3]			0.83[2]	2.19[3]	5.24[3]			1.46[3]	3.11[3]	6.82[4]			1.81[3]	3.81[3]	8.20
	24					2.05[2]				0.64[2]	3.42[3]				1.42[2]	4.86[3]			0.12[2]	1.92[3]	6.03[3]

40 psf Lateral Load

6" MEMBERS

Wall Height (ft)	Stud Spacing (in.) o.c.	600S137 33 ksi 33	600S137 33 ksi 43	600S137 50 ksi 54	600S137 50 ksi 68	600S137 50 ksi 97	600S162 33 ksi 33	600S162 33 ksi 43	600S162 50 ksi 54	600S162 50 ksi 68	600S162 50 ksi 97	600S200 33 ksi 33	600S200 33 ksi 43	600S200 50 ksi 54	600S200 50 ksi 68	600S200 50 ksi 97	600S250 33 ksi 33	600S250 33 ksi 43	600S250 50 ksi 54	600S250 50 ksi 68	600S250 50 ksi 97
8	12	0.93	1.68	3.09	4.34	6.85	1.43	2.41	4.67	6.51	10.4	1.82	3.22	6.36	8.86	14.5	2.03	3.55	6.58	9.90	17.0
	16	0.62	1.37	2.83	4.08	6.59	1.07	2.06	4.33	6.17	10.1	1.46	2.83	5.96	8.45	14.1	1.65	3.14	6.19	9.47	16.6
	24		0.78	2.31	3.57	6.08	0.38	1.37	3.66	5.50	9.40	0.74	2.05	5.17	7.65	13.2	0.90	2.35	5.43	8.64	15.6
9	12	0.67	1.42	2.86	4.11	6.62	1.13	2.11	4.36	6.20	10.1	1.50	2.85	5.91	8.37	13.9	1.69	3.17	6.16	9.37	16.3
	16	0.30	1.04	2.53	3.78	6.29	0.69	1.67	3.93	5.77	9.66	1.05	2.36	5.41	7.85	13.3	1.22	2.67	5.67	8.84	15.7
	24		0.31	1.88	3.13	5.64		0.82	3.10	4.92	8.79	0.19	1.42	4.43	6.86	12.3	0.32	1.69	4.72	7.79	14.6
10	12	0.40	1.14	2.60	3.85	6.35	0.81	1.78	4.01	5.84	9.7	1.16	2.45	5.41	7.80	13.2	1.33	2.76	5.68	8.77	15.5
	16		0.69	2.19	3.44	5.94	0.28	1.24	3.49	5.30	9.16	0.63	1.86	4.80	7.18	12.5	0.78	2.16	5.08	8.12	14.7
	24			1.41[4]	2.65	5.14		0.24[4]	2.49	4.28	8.08		0.75	3.64	5.99	11.2		1.00	3.95	6.86	13.3
12	12		0.52[4]	2.01	3.23	5.70	0.11[3]	1.02	3.17	4.98	8.76	0.43[4]	1.57	4.27	6.49	11.5	0.57	1.86	4.59	7.39	13.5
	16			1.45[4]	2.66	5.11		0.33[3]	2.47[4]	4.24	7.95		0.82[4]	3.47	5.66	10.5		1.07	3.80	6.50	12.5
	24			0.42[3]	1.60[3]	3.99[4]			1.17[3]	2.86[3]	6.44			2.02[3]	4.12[4]	8.82			2.34[3]	4.87	10.6
14	12			1.35[3]	2.52[4]	4.90		0.26[3]	2.20[3]	3.83	7.53		0.70[3]	3.07[4]	5.05	9.47		0.93[4]	3.44	5.88	11.2
	16			0.66[3]	1.80[3]	4.13[4]			1.37[3]	2.94[3]	6.49			2.15[3]	4.06[4]	8.35			2.49[3]	4.82[4]	10.0
	24				0.51[2]	2.73[3]				1.35[3]	4.62[3]			0.52[2]	2.31[3]	6.34[3]			0.80[3]	2.91[3]	7.75[4]
16	12			0.68[2]	1.76[3]	4.00[3]			1.28[3]	2.68[3]	5.83[4]			1.96[3]	3.66[3]	7.45			2.34[3]	4.40[4]	8.88
	16				0.93[2]	3.09[3]			0.40[2]	1.72[3]	4.69[3]			0.99[2]	2.60[3]	6.23[3]			1.30[3]	3.24[3]	7.54[4]
	24					1.47[2]					2.71[2]				0.76[2]	4.09[3]				1.19[2]	5.19[3]

NOTE: See page 30 for Table Notes.

COMBINED AXIAL AND LATERAL LOADS

50 psf Lateral Load

6" MEMBERS

Wall Height (ft)	Stud Spacing (in.) o.c.	600S137					600S162					600S200					600S250				
		33 ksi		50 ksi			33 ksi		50 ksi			33 ksi		50 ksi			33 ksi		50 ksi		
		33	43	54	68	97	33	43	54	68	97	33	43	54	68	97	33	43	54	68	97
8	12	0.70	1.45	2.89	4.14	6.65	1.16	2.15	4.41	6.25	10.2	1.55	2.92	6.06	8.55	14.2	1.74	3.24	6.29	9.58	16.7
	16	0.32	1.07	2.56	3.82	6.33	0.72	1.71	3.99	5.83	9.8	1.10	2.43	5.56	8.05	13.6	1.27	2.74	5.81	9.05	16.1
	24		0.35	1.93	3.19	5.71		0.86	3.17	5.01	8.90	0.23	1.49	4.59	7.07	12.6	0.36	1.77	4.86	8.02	15.0
9	12	0.39	1.14	2.61	3.86	6.37	0.80	1.78	4.04	5.87	9.8	1.16	2.48	5.53	7.98	13.5	1.34	2.79	5.79	8.97	15.9
	16		0.67	2.20	3.45	5.96	0.26	1.24	3.51	5.34	9.22	0.62	1.88	4.91	7.35	12.8	0.77	2.17	5.19	8.31	15.1
	24			1.41	2.66	5.17		0.21[4]	2.50	4.31	8.15		0.74	3.73	6.14	11.5		0.99	4.03	7.03	13.7
10	12		0.80	2.30	3.54	6.04	0.41	1.37	3.62	5.44	9.30	0.76	2.01	4.95	7.33	12.7	0.91	2.30	5.23	8.28	14.9
	16		0.25[4]	1.80	3.04	5.54		0.73	2.98	4.78	8.62	0.11[4]	1.30	4.21	6.57	11.9	0.24	1.57	4.51	7.48	14.0
	24			0.86[3]	2.09[4]	4.56			1.77[4]	3.54	7.30			2.82	5.13	10.3		0.18[4]	3.13	5.96	12.3
12	12			1.59[4]	2.80	5.25		0.50[4]	2.64	4.42	8.15		1.00[4]	3.67	5.86	10.8		1.26	3.99	6.72	12.7
	16			0.93[3]	2.12[4]	4.54			1.80[3]	3.53[4]	7.18		0.11[3]	2.73[4]	4.87	9.7		0.32[3]	3.05[4]	5.67	11.5
	24				0.85[3]	3.21[3]			0.28[3]	1.90[3]	5.39[4]			1.01[3]	3.05[3]	7.63			1.32[3]	3.72[4]	9.3
14	12			0.83[3]	1.97[3]	4.32[4]			1.57[3]	3.16[3]	6.74			2.37[3]	4.30[4]	8.62		0.22[3]	2.72[3]	5.07	10.3
	16				1.13[3]	3.41[3]			0.61[2]	2.12[3]	5.53[3]			1.31[3]	3.16[3]	7.31[4]			1.62[3]	3.83[3]	8.82
	24					1.77[2]				0.28[2]	3.37[3]				1.12[2]	4.98[3]				1.62[3]	6.26[3]
16	12				1.13[2]	3.31[3]			0.61[2]	1.95[3]	4.96[3]			1.22[3]	2.85[3]	6.52[4]			1.55[3]	3.52[3]	7.87[4]
	16				0.18[2]	2.25[2]				0.85[2]	3.66[3]			0.11[2]	1.64[2]	5.12[3]			0.35[2]	2.17[3]	6.32[3]
	24					0.39[1]					1.41[2]					2.68[2]					3.63[2]

5 psf Lateral Load (Interior Walls)

8" MEMBERS

Wall Height (ft)	Stud Spacing (in.) o.c.	800S137				800S162					800S200					800S250				
		33 ksi	50 ksi			33 ksi	50 ksi				33 ksi	50 ksi				33 ksi	50 ksi			
		43	54	68	97	43	54	68	97	118	43	54	68	97	118	43	54	68	97	118
8	12	2.42	3.56	4.73	7.21	3.35	5.42	7.23	11.2	14.3	4.47	7.73	10.3	16.0	20.4	4.89	8.16	11.8	19.7	25.8
	16	2.39	3.53	4.71	7.19	3.31	5.39	7.20	11.2	14.3	4.43	7.70	10.2	15.9	20.4	4.85	8.12	11.7	19.7	25.8
	24	2.34	3.49	4.67	7.15	3.25	5.33	7.15	11.2	14.2	4.35	7.62	10.2	15.9	20.3	4.78	8.05	11.7	19.6	25.7
9	12	2.40	3.54	4.71	7.19	3.32	5.40	7.21	11.2	14.3	4.43	7.70	10.2	15.9	20.4	4.85	8.09	11.7	19.6	25.7
	16	2.36	3.51	4.69	7.17	3.28	5.36	7.17	11.2	14.3	4.39	7.65	10.2	15.9	20.4	4.80	8.04	11.7	19.6	25.7
	24	2.29	3.45	4.63	7.11	3.19	5.28	7.10	11.1	14.2	4.29	7.56	10.1	15.8	20.3	4.70	7.95	11.6	19.5	25.5
10	12	2.37	3.52	4.69	7.17	3.29	5.37	7.18	11.2	14.3	4.40	7.66	10.2	15.9	20.4	4.79	8.01	11.6	19.5	25.5
	16	2.33	3.48	4.66	7.14	3.24	5.32	7.13	11.1	14.2	4.34	7.60	10.1	15.8	20.3	4.73	7.95	11.6	19.4	25.4
	24	2.24	3.41	4.59	7.07	3.13	5.22	7.04	11.1	14.2	4.22	7.48	10.0	15.7	20.2	4.60	7.83	11.4	19.3	25.3
12	12	2.31	3.46	4.64	7.12	3.21	5.30	7.11	11.1	14.2	4.31	7.57	10.1	15.8	20.3	4.65	7.79	11.4	19.1	24.8
	16	2.24	3.41	4.59	7.07	3.14	5.22	7.04	11.1	14.2	4.22	7.48	10.0	15.7	20.2	4.56	7.71	11.3	19.0	24.7
	24	2.12	3.30	4.49	6.97	2.98	5.08	6.90	10.9	14.0	4.04	7.30	9.83	15.5	20.0	4.38	7.53	11.1	18.8	24.5
14	12	2.23	3.40	4.58	7.06	3.12	5.20	7.02	11.0	14.1	4.14	7.34	9.91	15.7	20.1	4.47	7.50	11.0	18.4	23.8
	16	2.14	3.32	4.50	6.99	3.01	5.10	6.92	10.9	14.0	4.02	7.21	9.78	15.5	20.0	4.34	7.38	10.8	18.3	23.7
	24	1.97	3.17	4.36	6.85	2.80	4.90	6.72	10.7	13.9	3.77	6.96	9.53	15.3	19.7	4.10	7.13	10.6	18.0	23.4
16	12	2.14	3.32	4.50	6.98	3.00	5.09	6.90	10.9	14.0	3.91	6.92	9.39	15.1	19.7	4.24	7.12	10.4	17.4	22.6
	16	2.02	3.22	4.40	6.89	2.86	4.95	6.76	10.8	13.9	3.75	6.75	9.22	14.9	19.5	4.08	6.96	10.2	17.2	22.4
	24	1.79	3.02	4.20	6.69	2.58	4.68	6.49	10.5	13.7	3.43	6.42	8.89	14.5	19.1	3.76	6.64	9.86	16.8	21.9

15 psf Lateral Load

8" MEMBERS

Wall Height (ft)	Stud Spacing (in.) o.c.	800S137				800S162					800S200					800S250				
		33 ksi	50 ksi			33 ksi	50 ksi				33 ksi	50 ksi				33 ksi	50 ksi			
		43	54	68	97	43	54	68	97	118	43	54	68	97	118	43	54	68	97	118
8	12	2.25	3.42	4.60	7.09	3.15	5.24	7.06	11.1	14.2	4.24	7.51	10.1	15.7	20.2	4.66	7.94	11.5	19.5	25.6
	16	2.17	3.35	4.54	7.02	3.05	5.15	6.97	11.0	14.1	4.13	7.40	9.94	15.6	20.1	4.54	7.82	11.4	19.4	25.4
	24	2.01	3.22	4.40	6.90	2.86	4.98	6.80	10.8	14.0	3.90	7.18	9.72	15.4	19.9	4.31	7.60	11.2	19.1	25.2
9	12	2.19	3.36	4.55	7.03	3.07	5.17	6.99	11.0	14.1	4.14	7.41	10.0	15.6	20.1	4.55	7.80	11.4	19.3	25.4
	16	2.08	3.28	4.46	6.95	2.95	5.05	6.87	10.9	14.0	4.00	7.27	9.81	15.5	20.0	4.40	7.66	11.3	19.1	25.2
	24	1.87	3.10	4.30	6.79	2.70	4.83	6.65	10.7	13.8	3.71	6.98	9.53	15.2	19.7	4.10	7.38	10.9	18.8	24.9
10	12	2.11	3.30	4.48	6.97	2.98	5.08	6.90	10.9	14.0	4.04	7.30	9.84	15.5	20.0	4.42	7.65	11.2	19.1	25.0
	16	1.98	3.19	4.38	6.87	2.82	4.94	6.76	10.8	13.9	3.86	7.12	9.67	15.4	19.8	4.23	7.47	11.0	18.9	24.8
	24	1.72	2.98	4.17	6.67	2.52	4.66	6.48	10.5	13.7	3.50	6.77	9.32	15.0	19.5	3.87	7.12	10.7	18.4	24.4
12	12	1.93	3.14	4.33	6.83	2.76	4.87	6.69	10.7	13.9	3.78	7.03	9.57	15.3	19.7	4.11	7.27	10.8	18.4	24.2
	16	1.74	2.99	4.18	6.68	2.54	4.66	6.48	10.5	13.7	3.52	6.76	9.30	15.0	19.4	3.84	7.01	10.5	18.1	23.8
	24	1.37	2.68	3.88	6.39	2.10	4.25	6.08	10.1	13.3	3.00	6.24	8.78	14.5	18.9	3.32	6.50	10.0	17.5	23.2
14	12	1.71	2.96	4.14	6.64	2.49	4.61	6.42	10.4	13.6	3.41	6.58	9.15	14.9	19.3	3.73	6.78	10.2	17.5	22.9
	16	1.45	2.74	3.93	6.43	2.19	4.32	6.14	10.1	13.4	3.06	6.22	8.78	14.5	18.9	3.37	6.43	9.78	17.1	22.5
	24	0.96	2.32	3.52	6.03	1.61	3.76	5.57	9.56	12.9	2.39	5.51	8.06	13.7	18.2	2.68	5.74	9.03	16.3	21.6
16	12	1.45	2.73	3.92	6.41	2.18	4.29	6.10	10.1	13.3	2.97	5.94	8.40	14.0	18.5	3.29	6.18	9.35	16.3	21.4
	16	1.13	2.45	3.64	6.14	1.80	3.91	5.71	9.68	13.0	2.54	5.48	7.92	13.5	18.0	2.84	5.74	8.86	15.7	20.8
	24	0.51	1.91	3.10	5.60	1.07	3.19	4.97	8.91	12.3	1.71	4.60	7.02	12.5	17.0	1.98	4.88	7.91	14.6	19.6

NOTE: See page 30 for Table Notes.

For more information, please contact Marino\WARE® Technical Services at 866.545.1545
This technical information reflects the most current information available and supersedes any and all
previous publications effective February 17, 2023 | MW-Cold Formed Catalog | © WARE Industries, Inc., 2023

COMBINED AXIAL AND LATERAL LOADS

20 psf Lateral Load

8" MEMBERS

Wall Height (ft)	Stud Spacing (in.) o.c.	800S137 33 ksi 43	800S137 50 ksi 54	800S137 50 ksi 68	800S137 50 ksi 97	800S162 33 ksi 43	800S162 50 ksi 54	800S162 50 ksi 68	800S162 50 ksi 97	800S162 50 ksi 118	800S200 33 ksi 43	800S200 50 ksi 54	800S200 50 ksi 68	800S200 50 ksi 97	800S200 50 ksi 118	800S250 33 ksi 43	800S250 50 ksi 54	800S250 50 ksi 68	800S250 50 ksi 97	800S250 50 ksi 118
8	12	2.17	3.35	4.54	7.02	3.05	5.15	6.97	11.0	14.1	4.13	7.40	9.94	15.6	20.1	4.54	7.82	11.4	19.4	25.4
	16	2.06	3.26	4.45	6.94	2.93	5.04	6.86	10.9	14.0	3.98	7.25	9.79	15.5	20.0	4.38	7.68	11.3	19.2	25.3
	24	1.84	3.08	4.27	6.78	2.67	4.80	6.63	10.7	13.8	3.68	6.95	9.51	15.2	19.7	4.07	7.38	11.0	18.9	24.9
9	12	2.08	3.28	4.46	6.95	2.95	5.05	6.87	10.9	14.0	4.00	7.27	9.81	15.5	20.0	4.40	7.66	11.3	19.1	25.2
	16	1.94	3.16	4.35	6.85	2.78	4.90	6.73	10.7	13.9	3.81	7.08	9.63	15.3	19.8	4.20	7.47	11.0	18.9	25.0
	24	1.66	2.93	4.13	6.64	2.46	4.60	6.43	10.5	13.7	3.43	6.70	9.26	15.0	19.4	3.81	7.10	10.6	18.5	24.5
10	12	1.98	3.19	4.38	6.87	2.82	4.94	6.76	10.8	13.9	3.86	7.12	9.67	15.4	19.8	4.23	7.47	11.0	18.9	24.8
	16	1.81	3.05	4.24	6.74	2.62	4.75	6.58	10.6	13.8	3.62	6.88	9.43	15.1	19.6	3.99	7.24	10.8	18.6	24.6
	24	1.46	2.76	3.97	6.48	2.22	4.38	6.21	10.2	13.5	3.15	6.41	8.97	14.7	19.1	3.50	6.77	10.3	18.0	24.0
12	12	1.74	2.99	4.18	6.68	2.54	4.66	6.48	10.5	13.7	3.52	6.76	9.30	15.0	19.4	3.84	7.01	10.5	18.1	23.8
	16	1.49	2.78	3.98	6.48	2.24	4.39	6.21	10.2	13.5	3.17	6.41	8.96	14.6	19.1	3.49	6.67	10.1	17.7	23.4
	24	1.01	2.37	3.58	6.10	1.67	3.84	5.67	9.68	13.0	2.51	5.72	8.27	13.9	18.4	2.81	6.00	9.41	16.9	22.6
14	12	1.45	2.74	3.93	6.43	2.19	4.32	6.14	10.1	13.4	3.06	6.22	8.78	14.5	18.9	3.37	6.43	9.78	17.1	22.5
	16	1.12	2.46	3.65	6.16	1.80	3.94	5.76	9.75	13.0	2.61	5.74	8.30	14.0	18.4	2.91	5.97	9.28	16.5	21.9
	24	0.49	1.91	3.11	5.63	1.05	3.21	5.03	8.99	12.4	1.75	4.83	7.37	13.0	17.4	2.02	5.09	8.30	15.5	20.8
16	12	1.13	2.45	3.64	6.14	1.80	3.91	5.71	9.68	13.0	2.54	5.48	7.92	13.5	18.0	2.84	5.74	8.86	15.7	20.8
	16	0.72	2.08	3.28	5.77	1.30	3.42	5.22	9.16	12.5	1.98	4.89	7.32	12.8	17.3	2.26	5.16	8.22	15.0	20.0
	24		1.39[4]	2.58	5.07	0.38[4]	2.50	4.27	8.17	11.6	0.94	3.78	6.17	11.6	16.0	1.18	4.07	7.01	13.6	18.6

25 psf Lateral Load

8" MEMBERS

Wall Height (ft)	Stud Spacing (in.) o.c.	800S137 33 ksi 43	800S137 50 ksi 54	800S137 50 ksi 68	800S137 50 ksi 97	800S162 33 ksi 43	800S162 50 ksi 54	800S162 50 ksi 68	800S162 50 ksi 97	800S162 50 ksi 118	800S200 33 ksi 43	800S200 50 ksi 54	800S200 50 ksi 68	800S200 50 ksi 97	800S200 50 ksi 118	800S250 33 ksi 43	800S250 50 ksi 54	800S250 50 ksi 68	800S250 50 ksi 97	800S250 50 ksi 118
8	12	2.09	3.28	4.47	6.96	2.96	5.07	6.89	10.9	14.0	4.01	7.29	9.83	15.5	20.0	4.42	7.71	11.3	19.2	25.3
	16	1.95	3.17	4.36	6.86	2.80	4.92	6.74	10.8	13.9	3.83	7.10	9.65	15.3	19.8	4.23	7.53	11.1	19.0	25.1
	24	1.68	2.95	4.14	6.65	2.48	4.62	6.45	10.5	13.7	3.46	6.73	9.29	15.0	19.5	3.84	7.16	10.7	18.6	24.7
9	12	1.98	3.19	4.38	6.87	2.82	4.94	6.76	10.8	13.9	3.86	7.13	9.67	15.4	19.8	4.25	7.52	11.1	19.0	25.0
	16	1.80	3.05	4.24	6.74	2.62	4.75	6.58	10.6	13.8	3.62	6.89	9.44	15.1	19.6	4.00	7.28	10.8	18.7	24.8
	24	1.46	2.76	3.96	6.48	2.21	4.38	6.21	10.2	13.5	3.15	6.42	8.98	14.7	19.1	3.51	6.82	10.3	18.2	24.2
10	12	1.85	3.08	4.27	6.77	2.67	4.80	6.62	10.6	13.8	3.68	6.94	9.49	15.2	19.7	4.05	7.30	10.9	18.6	24.6
	16	1.63	2.91	4.10	6.61	2.42	4.56	6.39	10.4	13.6	3.38	6.65	9.20	14.9	19.4	3.75	7.00	10.5	18.3	24.3
	24	1.21	2.55	3.76	6.28	1.92	4.10	5.93	10.0	13.2	2.81	6.06	8.62	14.3	18.8	3.15	6.43	9.91	17.6	23.6
12	12	1.55	2.83	4.03	6.53	2.32	4.45	6.28	10.3	13.5	3.26	6.50	9.04	14.7	19.2	3.58	6.75	10.2	17.8	23.5
	16	1.25	2.57	3.78	6.29	1.96	4.11	5.94	10.0	13.2	2.84	6.06	8.61	14.3	18.7	3.15	6.33	9.77	17.3	23.0
	24	0.65	2.07	3.28	5.81	1.26	3.45	5.28	9.28	12.7	2.02	5.22	7.77	13.4	17.8	2.31	5.51	8.87	16.4	22.0
14	12	1.20	2.53	3.72	6.23	1.90	4.03	5.85	9.84	13.1	2.72	5.86	8.42	14.1	18.5	3.02	6.08	9.40	16.7	22.0
	16	0.80	2.18	3.38	5.89	1.42	3.57	5.39	9.37	12.7	2.17	5.28	7.83	13.5	17.9	2.46	5.52	8.78	16.0	21.3
	24		1.51	2.72	5.23	0.51	2.69	4.49	8.44	11.9	1.13	4.18	6.70	12.3	16.7	1.37	4.45	7.59	14.7	19.9
16	12	0.82	2.17	3.37	5.86	1.43	3.54	5.34	9.29	12.6	2.12	5.03	7.47	13.0	17.5	2.40	5.30	8.38	15.2	20.2
	16	0.32[4]	1.73	2.92	5.42	0.83	2.95	4.74	8.66	12.1	1.45	4.33	6.73	12.2	16.6	1.71	4.61	7.61	14.3	19.3
	24		0.90[3]	2.08[4]	4.57		1.86[4]	3.61	7.46	11.0	0.21[3]	3.01[4]	5.35	10.7	15.0	0.41[4]	3.30	6.15	12.6	17.5

30 psf Lateral Load

8" MEMBERS

Wall Height (ft)	Stud Spacing (in.) o.c.	800S137 33 ksi 43	800S137 50 ksi 54	800S137 50 ksi 68	800S137 50 ksi 97	800S162 33 ksi 43	800S162 50 ksi 54	800S162 50 ksi 68	800S162 50 ksi 97	800S162 50 ksi 118	800S200 33 ksi 43	800S200 50 ksi 54	800S200 50 ksi 68	800S200 50 ksi 97	800S200 50 ksi 118	800S250 33 ksi 43	800S250 50 ksi 54	800S250 50 ksi 68	800S250 50 ksi 97	800S250 50 ksi 118
8	12	2.01	3.22	4.40	6.90	2.86	4.98	6.80	10.8	14.0	3.90	7.18	9.72	15.4	19.9	4.31	7.60	11.2	19.1	25.2
	16	1.84	3.08	4.27	6.78	2.67	4.80	6.63	10.7	13.8	3.68	6.95	9.51	15.2	19.7	4.07	7.38	11.0	18.9	24.9
	24	1.52	2.81	4.01	6.53	2.29	4.45	6.28	10.3	13.5	3.23	6.51	9.07	14.8	19.2	3.61	6.94	10.5	18.4	24.4
9	12	1.87	3.10	4.30	6.79	2.70	4.83	6.65	10.7	13.8	3.71	6.98	9.53	15.2	19.7	4.10	7.38	10.9	18.8	24.9
	16	1.66	2.93	4.13	6.64	2.46	4.60	6.43	10.5	13.7	3.43	6.70	9.26	15.0	19.4	3.81	7.10	10.6	18.5	24.5
	24	1.25	2.59	3.80	6.32	1.97	4.16	5.99	10.0	13.3	2.87	6.14	8.70	14.4	18.9	3.22	6.54	10.0	17.8	23.9
10	12	1.72	2.98	4.17	6.67	2.52	4.66	6.48	10.5	13.7	3.50	6.77	9.32	15.0	19.5	3.87	7.12	10.7	18.4	24.4
	16	1.46	2.76	3.97	6.48	2.22	4.38	6.21	10.2	13.5	3.15	6.41	8.97	14.7	19.1	3.50	6.77	10.3	18.0	24.0
	24	0.96	2.34	3.56	6.08	1.63	3.82	5.66	9.69	13.0	2.46	5.72	8.28	14.0	18.4	2.79	6.08	9.54	17.2	23.2
12	12	1.37	2.68	3.88	6.39	2.10	4.25	6.08	10.1	13.3	3.00	6.24	8.78	14.5	18.9	3.32	6.50	10.0	17.5	23.2
	16	1.01	2.37	3.58	6.10	1.67	3.84	5.67	9.68	13.0	2.51	5.72	8.27	13.9	18.4	2.81	6.00	9.41	16.9	22.6
	24	0.31	1.77	2.99	5.52	0.85	3.06	4.89	8.89	12.3	1.55	4.73	7.28	12.9	17.3	1.82	5.03	8.35	15.8	21.4
14	12	0.96	2.32	3.52	6.03	1.61	3.76	5.57	9.56	12.9	2.39	5.51	8.06	13.7	18.2	2.68	5.74	9.03	16.3	21.6
	16	0.49	1.91	3.11	5.63	1.05	3.21	5.03	8.99	12.4	1.75	4.83	7.37	13.0	17.4	2.02	5.09	8.30	15.5	20.8
	24		1.12[4]	2.33	4.85		2.18	3.98	7.91	11.5	0.53	3.54	6.05	11.6	15.9	0.76	3.83	6.91	13.9	19.1
16	12	0.51	1.91	3.10	5.60	1.07	3.19	4.97	8.91	12.3	1.71	4.60	7.02	12.5	17.0	1.98	4.88	7.91	14.6	19.6
	16		1.39[4]	2.58	5.07	0.38[4]	2.50	4.27	8.17	11.6	0.94	3.78	6.17	11.6	16.0	1.18	4.07	7.01	13.6	18.6
	24		0.42[3]	1.60[3]	4.07		1.24[3]	2.96[4]	6.77	10.4		2.27[3]	4.58	9.8	14.1		2.57[4]	5.33	11.7	16.5

NOTE: See page 30 for Table Notes.

COMBINED AXIAL AND LATERAL LOADS

35 psf Lateral Load

8" MEMBERS

Wall Height (ft)	Stud Spacing (in.) o.c.	800S137				800S162					800S200					800S250				
		33 ksi	50 ksi			33 ksi	50 ksi				33 ksi	50 ksi				33 ksi	50 ksi			
		43	54	68	97	43	54	68	97	118	43	54	68	97	118	43	54	68	97	118
8	12	1.92	3.15	4.34	6.84	2.76	4.89	6.71	10.7	13.9	3.79	7.07	9.61	15.3	19.8	4.19	7.49	11.1	19.0	25.1
	16	1.73	2.99	4.19	6.69	2.54	4.68	6.51	10.5	13.7	3.53	6.81	9.36	15.1	19.5	3.92	7.23	10.8	18.7	24.8
	24	1.35	2.68	3.89	6.40	2.10	4.27	6.11	10.1	13.4	3.01	6.30	8.86	14.6	19.0	3.38	6.72	10.3	18.1	24.2
9	12	1.77	3.02	4.21	6.71	2.58	4.71	6.54	10.6	13.7	3.57	6.84	9.39	15.1	19.6	3.95	7.24	10.8	18.6	24.7
	16	1.53	2.82	4.02	6.53	2.29	4.45	6.28	10.3	13.5	3.24	6.51	9.07	14.8	19.2	3.61	6.91	10.4	18.3	24.3
	24	1.05	2.42	3.64	6.16	1.73	3.93	5.78	9.80	13.1	2.59	5.86	8.43	14.1	18.6	2.93	6.26	9.75	17.5	23.6
10	12	1.59	2.87	4.07	6.58	2.37	4.52	6.35	10.4	13.6	3.33	6.59	9.14	14.8	19.3	3.68	6.95	10.5	18.2	24.2
	16	1.30	2.62	3.83	6.34	2.02	4.19	6.03	10.1	13.3	2.92	6.18	8.74	14.4	18.9	3.26	6.54	10.0	17.8	23.7
	24	0.71	2.14	3.35	5.89	1.34	3.55	5.39	9.42	12.8	2.13	5.38	7.94	13.6	18.1	2.44	5.74	9.17	16.8	22.8
12	12	1.19	2.52	3.73	6.24	1.88	4.05	5.87	9.88	13.2	2.75	5.98	8.53	14.2	18.6	3.06	6.25	9.68	17.2	22.9
	16	0.77	2.17	3.38	5.90	1.39	3.58	5.41	9.41	12.8	2.18	5.39	7.94	13.6	18.0	2.47	5.67	9.05	16.5	22.2
	24		1.48	2.70	5.24	0.45	2.68	4.51	8.50	12.0	1.08	4.25	6.79	12.4	16.8	1.34	4.55	7.83	15.2	20.8
14	12	0.72	2.11	3.31	5.83	1.33	3.48	5.30	9.27	12.6	2.06	5.17	7.71	13.4	17.8	2.34	5.41	8.66	15.9	21.2
	16	0.18[4]	1.64	2.85	5.36	0.69	2.86	4.67	8.63	12.1	1.33	4.39	6.92	12.5	16.9	1.59	4.66	7.83	14.9	20.2
	24		0.74[3]	1.95	4.47		1.69[4]	3.47	7.38	11.0		2.93	5.41	10.9	15.2	0.16[4]	3.23	6.24	13.1	18.4
16	12	0.22[4]	1.65	2.84	5.33	0.72[4]	2.84	4.62	8.53	12.0	1.32	4.19	6.59	12.1	16.4	1.57	4.47	7.45	14.1	19.1
	16		1.06[3]	2.24	4.73		2.07[4]	3.83	7.69	11.2	0.45[4]	3.26	5.62	11.0	15.3	0.66[4]	3.56	6.43	13.0	17.9
	24			1.13[3]	3.59[4]		0.65[3]	2.35[3]	6.11	9.81		1.56[3]	3.83[4]	9.01	13.2		1.86[3]	4.54[4]	10.8	15.6

40 psf Lateral Load

8" MEMBERS

Wall Height (ft)	Stud Spacing (in.) o.c.	800S137				800S162					800S200					800S250				
		33 ksi	50 ksi			33 ksi	50 ksi				33 ksi	50 ksi				33 ksi	50 ksi			
		43	54	68	97	43	54	68	97	118	43	54	68	97	118	43	54	68	97	118
8	12	1.84	3.08	4.27	6.78	2.67	4.80	6.63	10.7	13.8	3.68	6.95	9.51	15.2	19.7	4.07	7.38	11.0	18.9	24.9
	16	1.62	2.90	4.10	6.61	2.41	4.57	6.40	10.4	13.6	3.38	6.66	9.22	14.9	19.4	3.77	7.08	10.6	18.5	24.6
	24	1.19	2.55	3.76	6.28	1.91	4.10	5.94	10.0	13.3	2.80	6.08	8.65	14.4	18.8	3.15	6.50	10.0	17.9	23.9
9	12	1.66	2.93	4.13	6.64	2.46	4.60	6.43	10.5	13.7	3.43	6.70	9.26	15.0	19.4	3.81	7.10	10.6	18.5	24.5
	16	1.39	2.71	3.91	6.42	2.13	4.30	6.14	10.2	13.4	3.06	6.33	8.89	14.6	19.1	3.42	6.72	10.2	18.1	24.1
	24	0.85	2.25	3.47	6.00	1.50	3.71	5.56	9.59	12.9	2.32	5.59	8.16	13.9	18.3	2.65	5.98	9.45	17.2	23.2
10	12	1.46	2.76	3.97	6.48	2.22	4.38	6.21	10.2	13.5	3.15	6.41	8.97	14.7	19.1	3.50	6.77	10.3	18.0	24.0
	16	1.13	2.48	3.69	6.21	1.82	4.01	5.84	9.87	13.2	2.69	5.95	8.51	14.2	18.7	3.03	6.31	9.79	17.5	23.4
	24	0.47	1.93	3.15	5.69	1.05	3.28	5.13	9.15	12.6	1.79	5.04	7.61	13.3	17.7	2.09	5.40	8.81	16.5	22.4
12	12	1.01	2.37	3.58	6.10	1.67	3.84	5.67	9.68	13.0	2.51	5.72	8.27	13.9	18.4	2.81	6.00	9.41	16.9	22.6
	16	0.54	1.97	3.18	5.71	1.12	3.32	5.15	9.15	12.5	1.86	5.06	7.61	13.3	17.7	2.14	5.35	8.70	16.2	21.8
	24		1.19	2.42	4.96		2.30	4.13	8.11	11.7	0.63	3.78	6.32	11.9	16.3	0.87	4.09	7.32	14.6	20.2
14	12	0.49	1.91	3.11	5.63	1.05	3.21	5.03	8.99	12.4	1.75	4.83	7.37	13.0	17.4	2.02	5.09	8.30	15.5	20.8
	16		1.38	2.59	5.10	0.34[4]	2.52	4.32	8.26	11.8	0.92	3.96	6.48	12.1	16.4	1.17	4.24	7.36	14.4	19.7
	24		0.37[3]	1.58[4]	4.09		1.21[3]	2.98	6.86	10.5		2.34[4]	4.80	10.3	14.5		2.64	5.59	12.4	17.6
16	12		1.39[4]	2.58	5.07	0.38[4]	2.50	4.27	8.17	11.6	0.94	3.78	6.17	11.6	16.0	1.18	4.07	7.01	13.6	18.6
	16		0.74[3]	1.92[4]	4.40		1.65[3]	3.39	7.22	10.8		2.76[4]	5.09	10.4	14.7	0.17[4]	3.06	5.87	12.3	17.2
	24			0.67[3]	3.12[3]			1.75[3]	5.46[4]	9.23		0.88[3]	3.12[3]	8.21	12.3		1.18[3]	3.77[4]	9.9	14.6

50 psf Lateral Load

8" MEMBERS

Wall Height (ft)	Stud Spacing (in.) o.c.	800S137				800S162					800S200					800S250				
		33 ksi	50 ksi			33 ksi	50 ksi				33 ksi	50 ksi				33 ksi	50 ksi			
		43	54	68	97	43	54	68	97	118	43	54	68	97	118	43	54	68	97	118
8	12	1.68	2.95	4.14	6.65	2.48	4.62	6.45	10.5	13.7	3.46	6.73	9.29	15.0	19.5	3.84	7.16	10.7	18.6	24.7
	16	1.41	2.72	3.93	6.44	2.16	4.33	6.17	10.2	13.4	3.09	6.37	8.93	14.6	19.1	3.46	6.79	10.3	18.2	24.3
	24	0.87	2.28	3.50	6.03	1.53	3.75	5.60	9.64	13.0	2.36	5.64	8.22	13.9	18.4	2.70	6.06	9.55	17.4	23.4
9	12	1.46	2.76	3.96	6.48	2.21	4.38	6.21	10.2	13.5	3.15	6.42	8.98	14.7	19.1	3.51	6.82	10.3	18.2	24.2
	16	1.12	2.48	3.69	6.21	1.81	4.01	5.85	9.88	13.2	2.69	5.96	8.52	14.2	18.7	3.03	6.35	9.85	17.6	23.7
	24	0.45	1.92	3.15	5.69	1.03	3.28	5.13	9.16	12.6	1.77	5.04	7.62	13.3	17.8	2.08	5.44	8.86	16.6	22.6
10	12	1.21	2.55	3.76	6.28	1.92	4.10	5.93	10.0	13.2	2.81	6.06	8.62	14.3	18.8	3.15	6.43	9.91	17.6	23.6
	16	0.80	2.21	3.42	5.95	1.43	3.64	5.48	9.51	12.9	2.24	5.49	8.06	13.7	18.2	2.56	5.86	9.30	17.0	22.9
	24		1.52	2.75	5.31	0.48	2.75	4.60	8.62	12.1	1.13	4.37	6.94	12.6	17.0	1.41	4.74	8.09	15.7	21.5
12	12	0.65	2.07	3.28	5.81	1.26	3.45	5.28	9.28	12.7	2.02	5.22	7.77	13.4	17.8	2.31	5.51	8.87	16.4	22.0
	16		1.58	2.80	5.33	0.58	2.80	4.63	8.62	12.1	1.24	4.41	6.96	12.6	17.0	1.50	4.71	8.00	15.4	21.0
	24		0.63[4]	1.86	4.41		1.56	3.39	7.35	11.0		2.86	5.38	11.0	15.3		3.18	6.31	13.5	19.1
14	12		1.51	2.72	5.23	0.51	2.69	4.49	8.44	11.9	1.13	4.18	6.70	12.3	16.7	1.37	4.45	7.59	14.7	19.9
	16		0.87[4]	2.07	4.59		1.85[4]	3.64	7.55	11.2	0.14[4]	3.13	5.62	11.2	15.5	0.35	3.42	6.46	13.4	18.6
	24			0.85[3]	3.36[4]		0.28[3]	2.03[3]	5.86	9.66		1.20[3]	3.61[4]	9.0	13.2		1.51[3]	4.33	11.0	16.1
16	12		0.90[3]	2.08[4]	4.57		1.86[4]	3.61	7.46	11.0	0.21[3]	3.01[4]	5.35	10.7	15.0	0.41[4]	3.30	6.15	12.6	17.5
	16		0.11[3]	1.28[3]	3.75[4]		0.84[3]	2.55[3]	6.32	10.0		1.79[3]	4.08[4]	9.3	13.5		2.09[3]	4.80	11.1	15.9
	24				2.22[3]			0.62[3]	4.23[3]	8.11[4]			1.76[3]	6.69[4]	10.7			2.32[3]	8.22[4]	12.9

NOTE: See page 30 for Table Notes.

For more information, please contact Marino\WARE® Technical Services at 866.545.1545
This technical information reflects the most current information available and supersedes any and all previous publications effective February 17, 2023 | MW-Cold Formed Catalog | © WARE Industries, Inc., 2023

COMBINED AXIAL AND LATERAL LOAD ILLUSTRATIONS

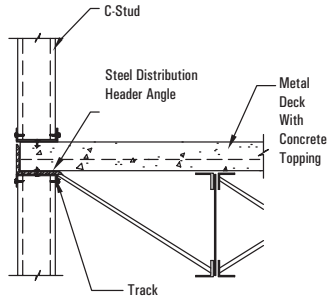

EXTERIOR WALL

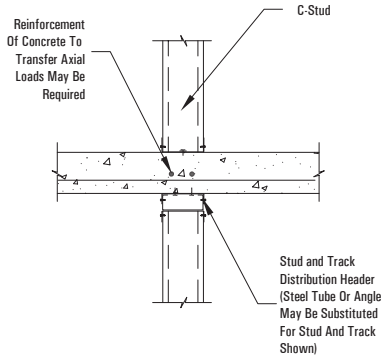

INTERIOR WALL

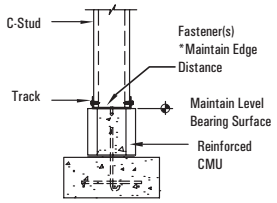

EXTERIOR FOUNDATION

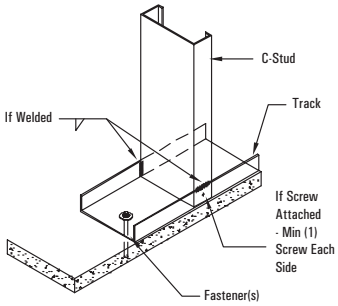

STUD TO TRACK

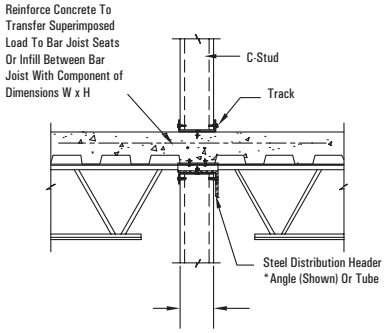

INTERIOR WALL W/ BAR JOIST

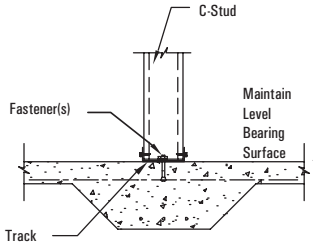

INTERIOR FOOTING

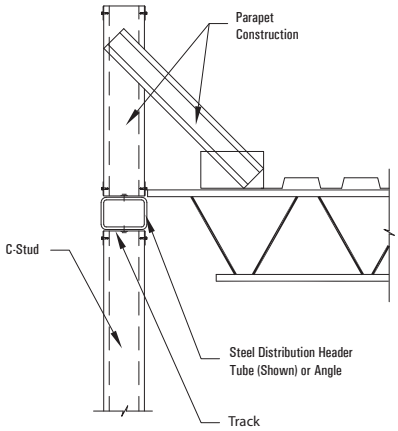

EXTERIOR WALL WITH BAR JOIST

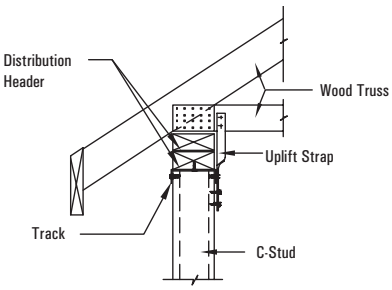

WOOD TRUSS @ EXTERIOR WALL

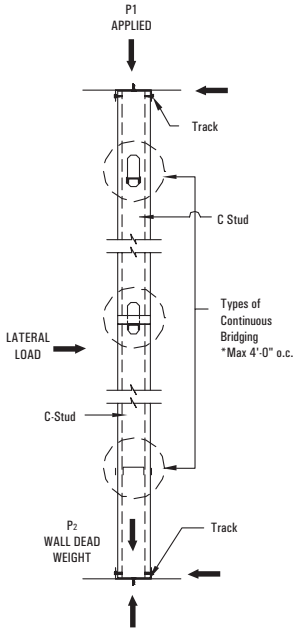

BEARING WALL SCHEMATIC

P DESIGN = $P_1 + P_2$

MECHANICAL BRIDGING

WALL APPLICATIONS

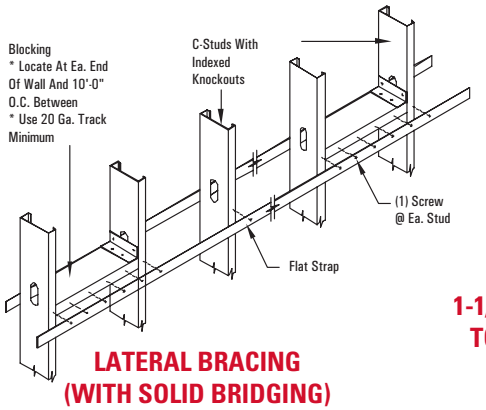

LATERAL BRACING (WITH SOLID BRIDGING)

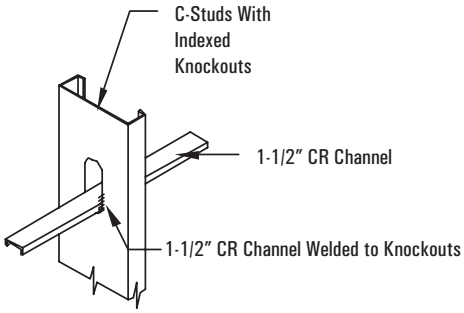

1-1/2" CR CHANNEL WELDED TO INDEXED KNOCKOUTS

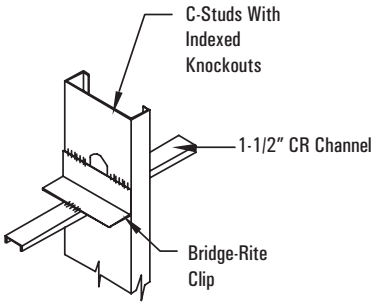

1-1/2" CR CHANNEL THROUGH INDEXED KNOCKOUTS
(WITH BRIDGE-RITE ANGLE CLIPS WELDED)

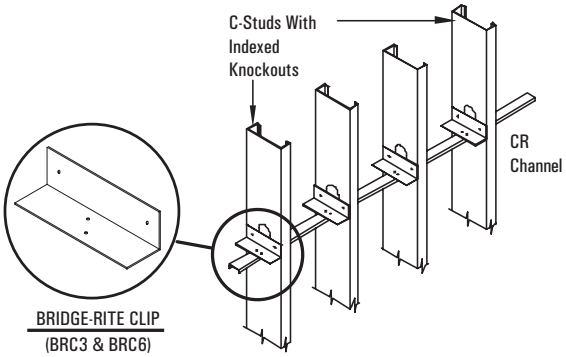

LATERAL BRACING
(WITH CR CHANNEL)

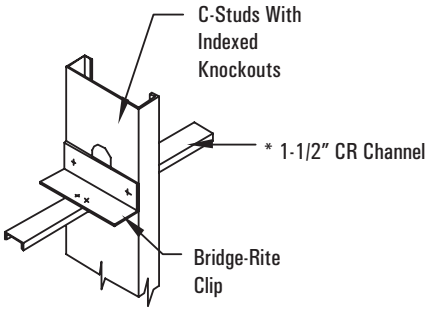

1-1/2" CR CHANNEL THROUGH INDEXED KNOCKOUTS
(WITH BRIDGE-RITE ANGLE CLIPS WELDED)

FLOOR & ROOF APPLICATIONS

SOLID BLOCKING (JB)

Joist Blocking is pre-cut to fit securely between joists to prevent joist rotation. Joist Blocking is a one piece system in lieu of the typical 3 piece detail offering an economical alternative to installing conventional clips and solid web members.

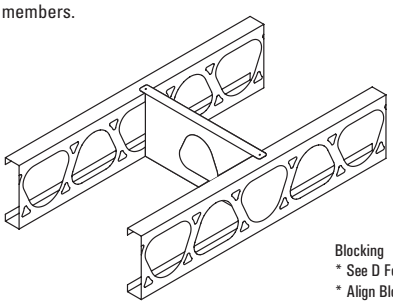

MATERIAL: 16 ga (54 mil) 50ksi
FINISH: Galvanized -G90

FLAT STRAP & BLOCKING (D1 & D2)

Blocking
- Locate at first and secnd spaces at ea. end and 10'-0" o.c.
- Use Matching Piece of o.c. Joist or min. 18 Ga. Track

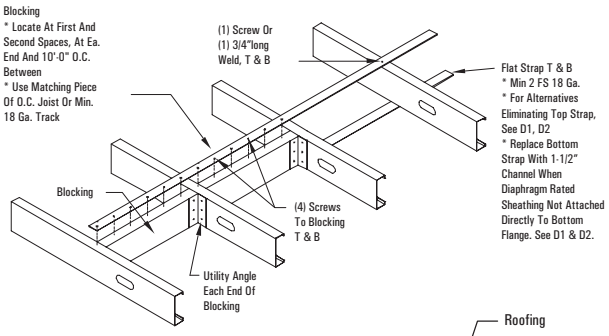

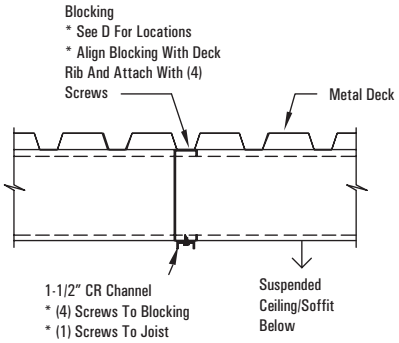

D1-SUBSTITUTE METAL DECK

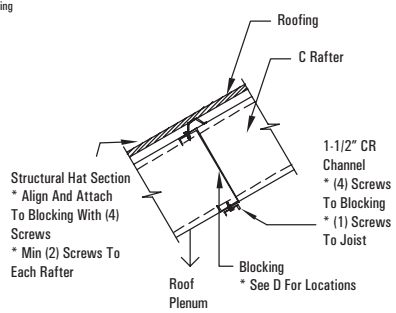

D2-SUBSTITUTE CHANNEL

For more information, please contact Marino\WARE® Technical Services at 866.545.1545
This technical information reflects the most current information available and supersedes any and all previous publications effective February 17, 2023 | MW-Cold Formed Catalog | © WARE Industries, Inc., 2023

FLOOR JOIST ILLUSTRATIONS

NOTES:

1. Spans are based on continuous support of the compression flange over the full length of the joist and the tension flange is laterally braced at maximum spacing of 8'-0".
2. For two equal spans, the listed span is the distance from either end to the center support, with the joist continuous over the center support.
3. Joists must be braced against rotation at all supports.
4. End shear and web crippling capacity have not been reduced for punchouts.
5. End web crippling check is based on a 3.5" bearing length.
   Where allowable spans are followed by "e", web stiffeners are required at end supports.
6. Interior support not checked for combined bending and web crippling. Web stiffeners are required at interior supports.
7. Shear capacity at interior support has been reduced for the presence of punchouts adjacent to the supports.
   Combined bending and shear check is based on unreinforced web based on AISI S100.
8. Total load deflection is limited to L/240. Live load deflection limit is as noted.
9. Alternate span live loading has been considered for two equal span conditions.
10. Bearing stiffeners must be designed in accordance with AISI S100 section F5, G4.
11. See General Notes on Page 6.

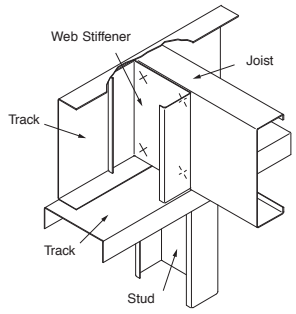

WEB STIFFENER: STUD SEGMENT ON BACK OF JOIST

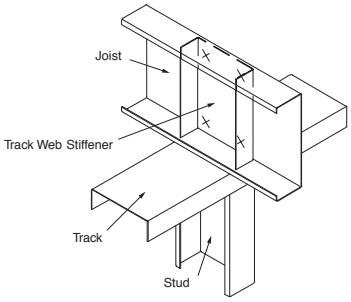

WEB STIFFENER: TRACK INSIDE JOIST

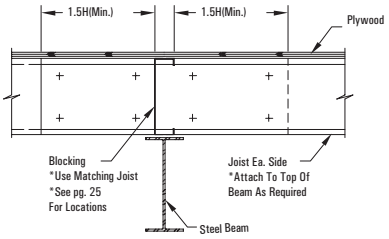

LAPPED JOIST @ INTERIOR SUPPORT

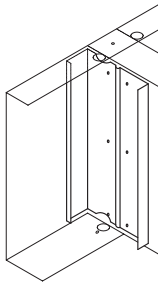

WEB STIFFENER: (JS)

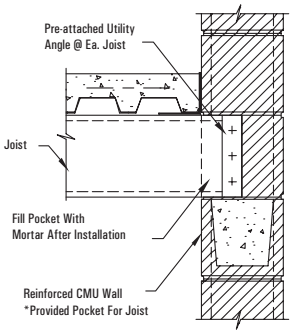

JOIST @REINFORCED CMU WALL

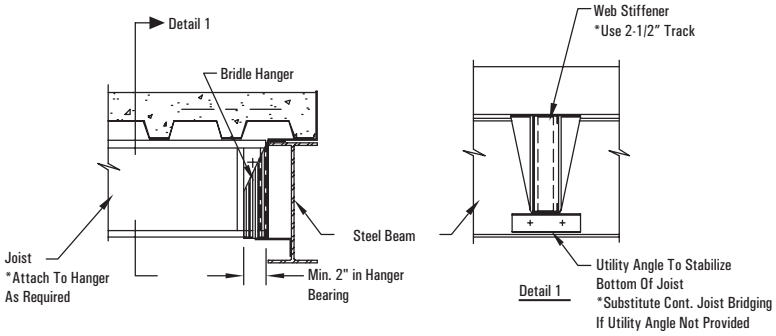

JOIST @ STEEL BEAM W/BRIDLE HANGER

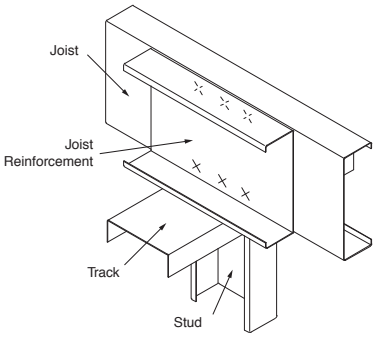

WEB STIFFENER: DOUBLE WEB
(USE BACK-TO-BACK WEB CRIPPLING TABLES)

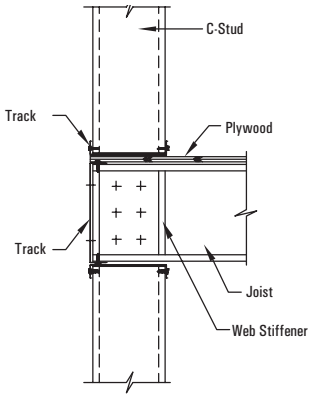

JOIST @ EXTERIOR BEARING WALL

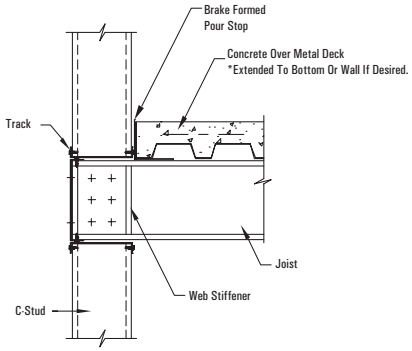

JOIST @ EXTERIOR BEARING WALL

BRIDGING RECOMMENDATIONS:

Bracing components shall be designed based on AISI S100 (C2) and the minimum number of rows required as shown in table. Additional bridging rows may be required by design. Check fire-rated assemblies for additional requirements.

SPAN (ft)	MINIMUM NUMBER OF ROWS
Up To 16 ft	1 at Mid-span
16 ft To 24 ft	2 Rows at 1/3 Points
24 ft To 32 ft	3 Rows at 1/4 Points

FLOOR JOIST SPANS

10 psf Dead Load and 20 psf Live Load

MEMBER	F_y (ksi)	LIVE LOAD DEFLECTION L/360						LIVE LOAD DEFLECTION L/480					
		SINGLE SPAN			TWO EQUAL SPANS			SINGLE SPAN			TWO EQUAL SPANS		
		JOIST SPACING (in.) o.c.			JOIST SPACING (in.) o.c.			JOIST SPACING (in.) o.c.			JOIST SPACING (in.) o.c.		
		12	16	24	12	16	24	12	16	24	12	16	24
600S137-33	33	13' 6"	11' 8"	9' 6"e	13' 6"	11' 7"	9' 2"	13' 6"	11' 8"	9' 6"e	13' 6"	11' 7"	9' 2"
600S137-43	33	16' 2"	14' 0"	11' 6"	16' 2"	14' 0"	11' 6"	15' 0"	13' 7"	11' 6"	16' 2"	14' 0"	11' 6"
600S137-43 (50)	50	16' 4"	14' 10"	13' 0"	18' 4"	16' 1"	13' 1"	14' 10"	13' 6"	11' 9"	16' 8"	15' 2"	13' 1"
600S137-54	50	17' 8"	16' 0"	14' 0"	19' 9"	18' 0"	15' 4"	16' 0"	14' 7"	12' 8"	18' 0"	16' 4"	14' 3"
600S137-68	50	18' 10"	17' 2"	15' 0"	21' 2"	19' 3"	16' 9"	17' 2"	15' 7"	13' 7"	19' 3"	17' 6"	15' 3"
600S137-97	50	20' 10"	19' 0"	16' 7"	23' 6"	21' 3"	18' 7"	19' 0"	17' 3"	15' 1"	21' 3"	19' 4"	16' 10"
600S162-33	33	14' 6"	12' 7"e	10' 3"e	14' 6"	12' 7"	10' 1"	14' 3"	12' 7"e	10' 3"e	14' 6"	12' 7"	10' 1"
600S162-43	33	17' 2"	15' 6"	12' 8"	17' 10"	15' 6"	12' 8"	15' 7"	14' 2"	12' 4"	17' 6"	15' 6"	12' 8"
600S162-43 (50)	50	17' 2"	15' 7"	13' 7"	19' 3"	17' 2"	14' 1"	15' 7"	14' 2"	12' 4"	17' 6"	15' 10"	13' 10"
600S162-54	50	18' 4"	16' 8"	14' 7"	20' 8"	18' 9"	16' 4"	16' 8"	15' 2"	13' 3"	18' 9"	17' 1"	14' 10"
600S162-68	50	19' 8"	17' 10"	15' 8"	22' 2"	20' 1"	17' 7"	17' 10"	16' 3"	14' 2"	20' 1"	18' 3"	16' 0"
600S162-97	50	21' 10"	19' 10"	17' 4"	24' 7"	22' 3"	19' 6"	19' 10"	18' 1"	15' 9"	22' 3"	20' 3"	17' 8"
600S162-118	50	23' 1"	21' 0"	18' 3"	25' 10"	23' 7"	20' 7"	21' 0"	19' 1"	16' 8"	23' 7"	21' 4"	18' 8"
600S200-33	33	15' 6"	13' 4"e	10' 10"e	15' 6"	13' 2"	10' 4"	15' 0"	13' 4"e	10' 10"e	15' 6"	13' 2"	10' 4"
600S200-43	33	18' 0"	16' 0"	13' 1"	18' 6"	16' 0"	13' 1"	16' 4"	14' 10"	13' 0"	18' 4"	16' 0"	13' 1"
600S200-43 (50)	50	18' 0"	16' 4"	14' 3"	20' 2"	18' 3"	15' 0"	16' 4"	14' 10"	13' 0"	18' 4"	16' 8"	14' 7"
600S200-54	50	19' 4"	17' 7"	15' 4"	21' 8"	19' 8"	17' 2"	17' 7"	16' 0"	14' 0"	19' 8"	17' 10"	15' 8"
600S200-68	50	20' 9"	18' 10"	16' 6"	23' 3"	21' 2"	18' 6"	18' 10"	17' 1"	15' 0"	21' 2"	19' 2"	16' 9"
600S200-97	50	23' 1"	21' 0"	18' 3"	25' 10"	23' 6"	20' 6"	21' 0"	19' 0"	16' 7"	23' 6"	21' 4"	18' 8"
600S200-118	50	24' 4"	22' 2"	19' 4"	27' 4"	24' 10"	21' 8"	22' 2"	20' 1"	17' 7"	24' 10"	22' 7"	19' 8"
600S250-43	33	18' 10"	16' 4"	13' 4"e	19' 0"	16' 4"	13' 4"	17' 2"	15' 7"	13' 4"e	19' 0"	16' 4"	13' 4"
600S250-43 (50)	50	18' 7"	16' 10"	14' 9"	20' 10"	18' 8"	15' 3"	16' 10"	15' 4"	13' 4"	19' 0"	17' 3"	15' 1"
600S250-54	50	20' 2"	18' 3"	16' 0"	22' 8"	20' 7"	17' 10"	18' 3"	16' 8"	14' 7"	20' 7"	18' 8"	16' 3"
600S250-68	50	21' 9"	19' 9"	17' 3"	24' 4"	22' 2"	19' 4"	19' 9"	18' 0"	15' 8"	22' 2"	20' 2"	17' 7"
600S250-97	50	24' 2"	22' 0"	19' 2"	27' 2"	24' 8"	21' 7"	22' 0"	20' 0"	17' 6"	24' 8"	22' 4"	19' 7"
600S250-118	50	25' 7"	23' 3"	20' 4"	28' 9"	26' 1"	22' 9"	23' 3"	21' 2"	18' 6"	26' 1"	23' 9"	20' 9"
600S300-54	50	20' 7"	18' 8"	16' 4"	23' 2"	21' 0"	18' 1"	18' 8"	17' 0"	14' 10"	21' 0"	19' 1"	16' 8"
600S300-68	50	22' 6"	20' 4"	17' 9"	25' 2"	22' 10"	20' 0"	20' 4"	18' 7"	16' 2"	22' 10"	20' 9"	18' 2"
600S300-97	50	25' 2"	22' 10"	20' 0"	28' 3"	25' 8"	22' 4"	22' 10"	20' 9"	18' 2"	25' 8"	23' 3"	20' 4"
600S300-118	50	26' 9"	24' 3"	21' 3"	30' 1"	27' 3"	23' 10"	24' 3"	22' 1"	19' 3"	27' 3"	24' 9"	21' 8"
800S137-33	33	15' 4"e	13' 4"e	10' 10"e	14' 10"e	12' 4"e	9' 6"e	15' 4"e	13' 4"e	10' 10"e	14' 10"e	12' 4"e	9' 6"e
800S137-43	33	18' 8"	16' 2"	13' 2"e	18' 8"	16' 2"	13' 2"	18' 8"	16' 2"	13' 2"e	18' 8"	16' 2"	13' 2"
800S137-43 (50)	50	20' 4"	18' 6"	15' 1"	21' 3"	18' 6"	15' 0"	18' 7"	16' 10"	14' 8"	20' 10"	18' 6"	15' 0"
800S137-54	50	22' 2"	20' 1"	17' 7"	24' 10"	21' 9"	17' 9"	20' 1"	18' 3"	16' 0"	22' 7"	20' 6"	17' 9"
800S137-68	50	24' 0"	21' 9"	19' 0"	26' 10"	24' 4"	21' 0"	21' 9"	19' 9"	17' 3"	24' 4"	22' 2"	19' 4"
800S137-97	50	26' 7"	24' 2"	21' 1"	29' 9"	27' 1"	23' 8"	24' 2"	21' 10"	19' 2"	27' 1"	24' 7"	21' 6"
800S162-33	33	16' 8"e	14' 6"e	11' 9"e	15' 7"e	13' 0"e	9' 10"e	16' 8"e	14' 6"e	11' 9"e	15' 7"e	13' 0"e	9' 10"e
800S162-43	33	20' 2"	17' 6"	14' 3"e	20' 2"	17' 6"	13' 10"	19' 6"	17' 6"	14' 3"e	20' 2"	17' 6"	13' 10"
800S162-43 (50)	50	21' 3"	19' 3"	16' 3"	22' 10"	19' 7"	15' 6"	19' 3"	17' 7"	15' 4"	21' 8"	19' 7"	15' 6"
800S162-54	50	23' 1"	20' 10"	18' 3"	25' 10"	23' 4"	19' 1"	20' 10"	19' 0"	16' 7"	23' 6"	21' 4"	18' 8"
800S162-68	50	24' 10"	22' 7"	19' 9"	28' 0"	25' 4"	22' 2"	22' 7"	20' 7"	18' 0"	25' 4"	23' 1"	20' 2"
800S162-97	50	27' 8"	25' 2"	22' 0"	31' 1"	28' 2"	24' 8"	25' 2"	22' 10"	20' 0"	28' 2"	25' 8"	22' 4"
800S162-118	50	29' 3"	26' 7"	23' 3"	32' 10"	29' 10"	26' 1"	26' 7"	24' 2"	21' 1"	29' 10"	27' 1"	23' 8"
800S200-43	33	21' 7"	18' 8"	15' 3"e	21' 7"	18' 8"	15' 3"	20' 7"	18' 8"	15' 3"e	21' 7"	18' 8"	15' 3"
800S200-43 (50)	50	22' 7"	20' 7"	17' 4"	24' 7"	21' 3"	16' 9"	20' 7"	18' 8"	16' 3"	23' 1"	21' 0"	16' 9"
800S200-54	50	24' 3"	22' 1"	19' 3"	27' 3"	24' 9"	20' 4"	22' 1"	20' 1"	17' 6"	24' 9"	22' 6"	19' 8"
800S200-68	50	26' 1"	23' 8"	20' 8"	29' 3"	26' 7"	23' 3"	23' 8"	21' 6"	18' 9"	26' 7"	24' 2"	21' 1"
800S200-97	50	29' 0"	26' 4"	23' 0"	32' 7"	29' 7"	25' 10"	26' 4"	24' 0"	20' 10"	29' 7"	26' 10"	23' 6"
800S200-118	50	30' 9"	27' 10"	24' 4"	34' 6"	31' 4"	27' 4"	27' 10"	25' 4"	22' 2"	31' 4"	28' 6"	24' 10"
800S250-43	33	22' 1"	19' 2"e	15' 8"e	22' 1"	19' 2"	15' 6"	21' 4"	19' 2"e	15' 8"e	22' 1"	19' 2"	15' 6"
800S250-43 (50)	50	23' 3"	21' 2"	17' 9"	25' 2"	21' 6"	16' 10"	21' 2"	19' 2"	16' 9"	23' 9"	21' 6"	16' 10"
800S250-54	50	25' 2"	22' 10"	20' 0"	28' 3"	25' 6"	20' 10"	22' 10"	20' 9"	18' 2"	25' 8"	23' 4"	20' 4"
800S250-68	50	27' 3"	24' 9"	21' 7"	30' 7"	27' 9"	24' 3"	24' 9"	22' 6"	19' 8"	27' 9"	25' 3"	22' 1"
800S250-97	50	30' 3"	27' 7"	24' 1"	34' 1"	30' 10"	27' 0"	27' 7"	25' 1"	21' 10"	30' 10"	28' 1"	24' 7"
800S250-118	50	32' 2"	29' 2"	25' 6"	36' 1"	32' 9"	28' 8"	29' 2"	26' 7"	23' 2"	32' 9"	29' 9"	26' 0"
800S300-54	50	25' 8"	23' 4"	20' 4"	28' 10"	25' 10"	21' 1"	23' 4"	21' 2"	18' 7"	26' 2"	23' 9"	20' 9"
800S300-68	50	28' 0"	25' 6"	22' 3"	31' 6"	28' 7"	24' 9"	25' 6"	23' 1"	20' 2"	28' 7"	26' 0"	22' 8"
800S300-97	50	31' 6"	28' 7"	25' 0"	35' 3"	32' 1"	28' 0"	28' 7"	26' 0"	22' 8"	32' 1"	29' 2"	25' 6"
800S300-118	50	33' 6"	30' 4"	26' 7"	37' 7"	34' 1"	29' 9"	30' 4"	27' 7"	24' 1"	34' 1"	31' 0"	27' 1"
1000S162-33	33	18' 4"e	15' 10"e	12' 7"e	15' 8"e	12' 8"e	9' 1"e	18' 4"e	15' 10"e	12' 7"e	15' 8"e	12' 8"e	9' 1"e
1000S162-43	33	22' 4"e	19' 4"e	15' 9"e	22' 3"e	18' 9"e	14' 8"e	22' 4"e	19' 4"e	15' 9"e	22' 3"e	18' 9"e	14' 8"e
1000S162-43 (50)	50	25' 2"e	22' 0"e	17' 10"e	24' 8"e	20' 8"e	16' 0"e	22' 10"e	20' 9"e	17' 10"e	24' 8"e	20' 8"e	16' 0"e
1000S162-54	50	27' 4"	24' 10"	21' 2"	30' 0"	25' 10"	21' 2"	24' 10"	22' 7"	19' 9"	27' 10"	25' 4"	21' 2"
1000S162-68	50	29' 8"	27' 0"	23' 7"	33' 4"	30' 3"	25' 0"	27' 0"	24' 6"	21' 4"	30' 3"	27' 6"	24' 1"
1000S162-97	50	33' 3"	30' 3"	26' 6"	37' 4"	34' 0"	29' 8"	30' 3"	27' 6"	24' 0"	34' 0"	30' 10"	27' 0"
1000S162-118	50	35' 3"	32' 1"	28' 0"	39' 8"	36' 0"	31' 6"	32' 1"	29' 2"	25' 6"	36' 0"	32' 8"	28' 7"
1000S200-43	33	24' 1"e	20' 10"e	17' 0"e	23' 4"e	19' 9"e	15' 3"e	24' 1"e	20' 10"e	17' 0"e	23' 4"e	19' 9"e	15' 3"e
1000S200-43 (50)	50	26' 4"e	23' 8"e	19' 4"e	26' 2"e	21' 10"e	16' 8"e	24' 0"e	21' 9"e	19' 0"e	26' 2"e	21' 10"e	16' 8"e
1000S200-54	50	28' 7"	26' 0"	22' 8"	32' 1"	27' 9"	22' 2"	26' 0"	23' 7"	20' 7"	29' 2"	26' 6"	22' 2"
1000S200-68	50	31' 0"	28' 2"	24' 7"	34' 10"	31' 8"	26' 9"	28' 2"	25' 7"	22' 4"	31' 8"	28' 9"	25' 1"
1000S200-97	50	34' 9"	31' 7"	27' 7"	39' 1"	35' 6"	31' 0"	31' 7"	28' 9"	25' 1"	35' 6"	32' 3"	28' 2"
1000S200-118	50	36' 10"	33' 7"	29' 3"	41' 6"	37' 8"	32' 10"	33' 7"	30' 6"	26' 7"	37' 8"	34' 2"	29' 10"

NOTE: See page 43 for Table Notes.

For more information, please contact Marino\WARE® Technical Services at 866.545.1545
This technical information reflects the most current information available and supersedes any and all
previous publications effective February 17, 2023 | MW-Cold Formed Catalog | © WARE Industries, Inc., 2023

10 psf Dead Load and 20 psf Live Load

MEMBER	F_y (ksi)	LIVE LOAD DEFLECTION L/360						LIVE LOAD DEFLECTION L/480					
		SINGLE SPAN			TWO EQUAL SPANS			SINGLE SPAN			TWO EQUAL SPANS		
		JOIST SPACING (in.) o.c.			JOIST SPACING (in.) o.c.			JOIST SPACING (in.) o.c.			JOIST SPACING (in.) o.c.		
		12	16	24	12	16	24	12	16	24	12	16	24
1000S250-43	33	24' 9"e	21' 6"e	17' 6"e	24' 4"e	20' 6"e	15' 9"e	24' 9"e	21' 6"e	17' 6"e	24' 4"e	20' 6"e	15' 9"e
1000S250-43 (50)	50	27' 6"e	24' 3"e	19' 10"e	26' 8"e	22' 3"e	17' 0"e	25' 0"e	22' 8"e	19' 9"e	26' 8"e	22' 3"e	17' 0"e
1000S250-54	50	30' 1"	27' 4"	23' 4"	33' 1"	28' 7"	23' 1"	27' 4"	24' 10"	21' 8"	30' 8"	27' 10"	23' 1"
1000S250-68	50	32' 6"	29' 7"	25' 9"	36' 6"	33' 2"	27' 6"	29' 7"	26' 10"	23' 6"	33' 2"	30' 1"	26' 3"
1000S250-97	50	36' 3"	32' 10"	28' 9"	40' 8"	37' 0"	32' 3"	32' 10"	29' 10"	26' 2"	37' 0"	33' 7"	29' 4"
1000S250-118	50	38' 6"	35' 0"	30' 6"	43' 2"	39' 2"	34' 3"	35' 0"	31' 9"	27' 9"	39' 2"	35' 8"	31' 2"
1000S300-54	50	30' 8"	27' 10"	23' 8"	33' 7"	29' 1"	23' 2"	27' 10"	25' 3"	22' 1"	31' 3"	28' 4"	23' 2"
1000S300-68	50	33' 4"	30' 3"	26' 6"	37' 6"	34' 0"	28' 0"	30' 3"	27' 7"	24' 1"	34' 0"	30' 10"	27' 0"
1000S300-97	50	37' 6"	34' 1"	29' 9"	42' 1"	38' 2"	33' 4"	34' 1"	30' 10"	27' 0"	38' 2"	34' 8"	30' 3"
1000S300-118	50	39' 10"	36' 3"	31' 8"	44' 9"	40' 8"	35' 7"	36' 3"	33' 0"	28' 9"	40' 8"	37' 0"	32' 3"
1000S350-54	50	32' 4"	29' 4"	25' 8"	36' 3"	31' 10"	25' 2"	29' 4"	26' 8"	23' 3"	33' 0"	30' 0"	25' 2"
1000S350-68	50	35' 3"	32' 1"	28' 0"	39' 7"	36' 0"	31' 0"	32' 1"	29' 1"	25' 6"	36' 0"	32' 8"	28' 7"
1000S350-97	50	39' 6"	35' 10"	31' 3"	44' 3"	40' 3"	35' 2"	35' 10"	32' 7"	28' 6"	40' 3"	36' 7"	32' 0"
1000S350-118	50	41' 10"	38' 1"	33' 3"	47' 1"	42' 9"	37' 4"	38' 1"	34' 7"	30' 2"	42' 9"	38' 10"	34' 0"
1200S162-43	33	24' 0"e	20' 9"e	17' 0"e	23' 3"e	19' 3"e	14' 7"e	24' 0"e	20' 9"e	17' 0"e	23' 3"e	19' 3"e	14' 7"e
1200S162-43 (50)	50	27' 1"e	23' 6"e	19' 2"e	25' 4"e	20' 10"e	15' 6"e	26' 3"e	23' 6"e	19' 2"e	25' 4"e	20' 10"e	15' 6"e
1200S162-54	50	31' 6"e	27' 10"e	22' 9"e	32' 2"e	27' 10"e	22' 4"e	28' 7"e	26' 0"e	22' 8"e	32' 1"e	27' 10"e	22' 4"e
1200S162-68	50	34' 3"	31' 2"	27' 1"	38' 3"	33' 2"	27' 1"	31' 2"	28' 3"	24' 8"	35' 0"	31' 9"	27' 1"
1200S162-97	50	38' 9"	35' 3"	30' 9"	43' 7"	39' 7"	34' 7"	35' 3"	32' 1"	28' 0"	39' 7"	36' 0"	31' 4"
1200S162-118	50	41' 3"	37' 6"	32' 8"	46' 3"	42' 1"	36' 9"	37' 6"	34' 1"	29' 9"	42' 1"	38' 2"	33' 4"
1200S200-54	50	32' 10"e	29' 10"e	24' 8"e	34' 9"e	29' 6"e	23' 1"e	29' 10"e	27' 1"e	23' 8"e	33' 6"e	29' 6"e	23' 1"e
1200S200-68	50	35' 8"	32' 6"	28' 4"	40' 1"	35' 8"	29' 2"	32' 6"	29' 6"	25' 9"	36' 6"	33' 1"	28' 10"
1200S200-97	50	40' 4"	36' 8"	32' 1"	45' 4"	41' 3"	36' 0"	36' 8"	33' 4"	29' 2"	41' 3"	37' 6"	32' 8"
1200S200-118	50	43' 0"	39' 1"	34' 1"	48' 3"	43' 9"	38' 3"	39' 1"	35' 6"	31' 0"	43' 9"	39' 9"	34' 9"
1200S250-54	50	34' 3"e	31' 1"e	25' 6"e	35' 4"e	30' 0"e	23' 6"e	31' 1"e	28' 3"e	24' 8"e	35' 0"e	30' 0"e	23' 6"e
1200S250-68	50	37' 3"	33' 9"	29' 7"	41' 9"	36' 10"	30' 1"	33' 9"	30' 8"	26' 10"	38' 0"	34' 6"	30' 1"
1200S250-97	50	42' 0"	38' 2"	33' 4"	47' 2"	42' 10"	37' 6"	38' 2"	34' 8"	30' 3"	42' 10"	39' 0"	34' 0"
1200S250-118	50	44' 7"	40' 7"	35' 4"	50' 1"	45' 6"	39' 9"	40' 7"	36' 10"	32' 2"	45' 6"	41' 4"	36' 1"
1200S300-54	50	35' 6"e	31' 9"e	26' 0"e	36' 3"e	30' 8"e	23' 10"e	32' 2"e	29' 3"e	25' 7"e	36' 2"e	30' 8"e	23' 10"e
1200S300-68	50	38' 8"	35' 2"	30' 8"	43' 4"	37' 7"	30' 8"	35' 2"	31' 10"	27' 10"	39' 6"	35' 10"	30' 8"
1200S300-97	50	43' 6"	39' 6"	34' 6"	48' 9"	44' 3"	38' 8"	39' 6"	35' 10"	31' 4"	44' 3"	40' 3"	35' 2"
1200S300-118	50	46' 2"	42' 0"	36' 8"	51' 10"	47' 1"	41' 2"	42' 0"	38' 1"	33' 3"	47' 1"	42' 9"	37' 4"
1200S350-54	50	37' 3"e	33' 10"e	29' 0"e	39' 6"e	33' 3"e	25' 8"e	33' 10"e	30' 9"e	26' 10"e	38' 1"e	33' 3"e	25' 8"e
1200S350-68	50	40' 9"	37' 0"	32' 4"	45' 9"	41' 7"	34' 1"	37' 0"	33' 7"	29' 4"	41' 7"	37' 9"	33' 0"
1200S350-97	50	45' 7"	41' 4"	36' 2"	51' 1"	46' 6"	40' 7"	41' 4"	37' 7"	32' 10"	46' 6"	42' 2"	36' 10"
1200S350-118	50	48' 4"	44' 0"	38' 4"	54' 4"	49' 4"	43' 2"	44' 0"	40' 0"	34' 10"	49' 4"	44' 10"	39' 2"
1400S162-54	50	34' 0"e	29' 6"e	24' 1"e	34' 0"e	29' 6"e	22' 8"e	32' 2"e	29' 3"e	24' 1"e	34' 0"e	29' 6"e	22' 8"e
1400S162-68	50	38' 8"	35' 1"	28' 9"	40' 8"	35' 3"	28' 9"	35' 1"	31' 10"	27' 10"	39' 4"	35' 3"	28' 9"
1400S162-97	50	44' 0"	40' 0"	34' 10"	49' 4"	44' 10"	37' 8"	40' 0"	36' 3"	31' 8"	44' 10"	40' 9"	35' 7"
1400S162-118	50	47' 1"	42' 9"	37' 4"	52' 10"	48' 1"	42' 0"	42' 9"	38' 10"	34' 0"	48' 1"	43' 8"	38' 2"
1400S200-54	50	36' 10"e	32' 1"e	26' 2"e	36' 4"e	30' 6"e	23' 3"e	33' 7"e	30' 6"e	26' 2"e	36' 4"e	30' 6"e	23' 3"e
1400S200-68	50	40' 3"	36' 7"	31' 1"	44' 0"	38' 1"	31' 1"	36' 7"	33' 2"	29' 0"	41' 1"	37' 3"	31' 1"
1400S200-97	50	45' 8"	41' 7"	36' 3"	51' 3"	46' 7"	40' 4"	41' 7"	37' 9"	33' 0"	46' 7"	42' 4"	37' 0"
1400S200-118	50	49' 0"	44' 6"	38' 10"	55' 0"	49' 10"	43' 7"	44' 6"	40' 4"	35' 3"	49' 10"	45' 4"	39' 7"
1400S250-54	50	38' 3"e	33' 3"e	27' 2"e	36' 10"e	30' 10"e	23' 7"e	34' 9"e	31' 7"e	27' 2"e	36' 10"e	30' 10"e	23' 7"e
1400S250-68	50	41' 9"	38' 0"	32' 3"	45' 8"	39' 6"	31' 10"	38' 0"	34' 6"	30' 2"	42' 8"	38' 9"	31' 10"
1400S250-97	50	47' 6"	43' 1"	37' 8"	53' 3"	48' 4"	41' 10"	43' 1"	39' 2"	34' 2"	48' 4"	44' 0"	38' 4"
1400S250-118	50	50' 8"	46' 1"	40' 2"	56' 10"	51' 8"	45' 2"	46' 1"	41' 10"	36' 7"	51' 8"	47' 0"	41' 0"
1400S300-54	50	39' 0"e	34' 1"e	27' 10"e	37' 2"e	31' 1"e	23' 8"e	35' 6"e	32' 2"e	27' 10"e	37' 2"e	31' 1"e	23' 8"e
1400S300-68	50	43' 0"	39' 0"	33' 0"	46' 8"	40' 6"	32' 3"	39' 0"	35' 6"	31' 0"	43' 9"	39' 9"	32' 3"
1400S300-97	50	49' 1"	44' 7"	38' 10"	55' 1"	50' 0"	42' 10"	44' 7"	40' 6"	35' 4"	50' 0"	45' 6"	39' 8"
1400S300-118	50	52' 3"	47' 7"	41' 6"	58' 9"	53' 4"	46' 7"	47' 7"	43' 2"	37' 9"	53' 4"	48' 6"	42' 4"
1400S350-54	50	41' 7"e	37' 9"e	31' 3"e	40' 7"e	33' 8"e	25' 3"e	37' 9"e	34' 4"e	30' 0"e	40' 7"e	33' 8"e	25' 3"e
1400S350-68	50	46' 1"	41' 9"	36' 7"	51' 8"	45' 2"	35' 10"	41' 9"	38' 0"	33' 2"	47' 0"	42' 8"	35' 10"
1400S350-97	50	51' 6"	46' 9"	40' 10"	57' 9"	52' 6"	45' 10"	46' 9"	42' 6"	37' 1"	52' 6"	47' 8"	41' 8"
1400S350-118	50	54' 9"	49' 9"	43' 6"	61' 6"	55' 10"	48' 9"	49' 9"	45' 2"	39' 6"	55' 10"	50' 9"	44' 3"
1600S162-68	50	42' 8"e	36' 10"e	30' 2"e	42' 8"e	36' 10"e	30' 2"e	38' 10"e	35' 4"e	30' 2"e	42' 8"e	36' 10"e	30' 2"e
1600S162-97	50	49' 0"	44' 6"	38' 10"	55' 0"	48' 9"	39' 9"	44' 6"	40' 4"	35' 3"	50' 0"	45' 4"	39' 8"
1600S162-118	50	52' 7"	47' 9"	41' 9"	59' 1"	53' 8"	46' 4"	47' 9"	43' 4"	37' 10"	53' 8"	48' 9"	42' 7"
1600S200-68	50	44' 7"e	40' 1"e	32' 8"e	46' 3"e	40' 1"e	32' 8"e	40' 6"e	36' 9"e	32' 2"e	45' 6"e	40' 1"e	32' 8"e
1600S200-97	50	50' 9"	46' 2"	40' 4"	57' 1"	51' 10"	42' 9"	46' 2"	42' 0"	36' 8"	51' 10"	47' 1"	41' 2"
1600S200-118	50	54' 7"	49' 7"	43' 3"	61' 3"	55' 8"	48' 7"	49' 7"	45' 0"	39' 3"	55' 8"	50' 7"	44' 2"
1600S250-68	50	46' 2"e	41' 9"e	34' 1"e	48' 2"e	41' 9"e	33' 0"e	42' 0"e	38' 2"e	33' 3"e	47' 1"e	41' 9"e	33' 0"e
1600S250-97	50	52' 7"	47' 9"	41' 9"	59' 0"	53' 7"	44' 7"	47' 9"	43' 4"	37' 10"	53' 7"	48' 8"	42' 7"
1600S250-118	50	56' 4"	51' 3"	44' 9"	63' 3"	57' 6"	50' 3"	51' 3"	46' 7"	40' 8"	57' 6"	52' 3"	45' 8"
1600S300-68	50	47' 3"e	42' 10"e	35' 1"e	49' 7"e	42' 4"e	33' 4"e	43' 0"e	39' 1"e	34' 1"e	48' 2"e	42' 4"e	33' 4"e
1600S300-97	50	54' 2"	49' 2"	43' 0"	60' 9"	55' 3"	45' 8"	49' 2"	44' 8"	39' 1"	55' 3"	50' 2"	43' 10"
1600S300-118	50	58' 2"	52' 10"	46' 2"	65' 3"	59' 4"	51' 10"	52' 10"	48' 0"	42' 0"	59' 4"	53' 10"	47' 1"
1600S350-68	50	49' 10"e	45' 3"e	39' 3"e	54' 8"e	46' 3"e	36' 1"e	45' 3"e	41' 2"e	36' 0"e	50' 10"e	46' 2"e	36' 1"e
1600S350-97	50	56' 9"	51' 7"	45' 0"	63' 8"	57' 10"	50' 7"	51' 7"	46' 9"	40' 10"	57' 10"	52' 7"	45' 10"
1600S350-118	50	60' 9"	55' 2"	48' 3"	68' 2"	62' 0"	54' 2"	55' 2"	50' 2"	43' 9"	62' 0"	56' 3"	49' 2"

NOTE: See page 43 for Table Notes.

FLOOR JOIST SPANS

10 psf Dead Load and 30 psf Live Load

MEMBER	F_y (ksi)	LIVE LOAD DEFLECTION L/360						LIVE LOAD DEFLECTION L/480					
		Single Span			Two Equal Spans			Single Span			Two Equal Spans		
		JOIST SPACING (in.) o.c.			JOIST SPACING (in.) o.c.			JOIST SPACING (in.) o.c.			JOIST SPACING (in.) o.c.		
		12	16	24	12	16	24	12	16	24	12	16	24
600S137-33	33	11' 8"	10' 1"e	8' 3"e	11' 7"	9' 9"	7' 8"	11' 8"	10' 1"e	8' 3"e	11' 7"	9' 9"	7' 8"
600S137-43	33	14' 0"	12' 2"	9' 10"	14' 0"	12' 2"	9' 10"	13' 1"	11' 10"	9' 10"	14' 0"	12' 2"	9' 10"
600S137-43 (50)	50	14' 3"	13' 0"	11' 4"	16' 1"	13' 10"	11' 3"	13' 0"	11' 9"	10' 3"	14' 7"	13' 3"	11' 3"
600S137-54	50	15' 4"	14' 0"	12' 2"	17' 3"	15' 8"	13' 3"	14' 0"	12' 8"	11' 1"	15' 8"	14' 3"	12' 6"
600S137-68	50	16' 6"	15' 0"	13' 1"	18' 6"	16' 9"	14' 8"	15' 0"	13' 7"	11' 10"	16' 9"	15' 3"	13' 4"
600S137-97	50	18' 3"	16' 7"	14' 6"	20' 6"	18' 7"	16' 3"	16' 7"	15' 1"	13' 2"	18' 7"	16' 10"	14' 9"
600S162-33	33	12' 7"e	10' 10"e	8' 10"e	12' 7"	10' 9"	8' 4"e	12' 6"e	10' 10"e	8' 10"e	12' 7"	10' 9"	8' 4"e
600S162-43	33	15' 0"	13' 4"	11' 0"e	15' 6"	13' 4"	11' 0"	13' 7"	12' 4"	10' 9"e	15' 3"	13' 4"	11' 0"
600S162-43 (50)	50	15' 0"	13' 7"	11' 10"	16' 9"	14' 10"	12' 2"	13' 7"	12' 4"	10' 9"	15' 3"	13' 10"	12' 1"
600S162-54	50	16' 1"	14' 7"	12' 9"	18' 1"	16' 4"	14' 3"	14' 7"	13' 3"	11' 7"	16' 4"	14' 10"	13' 0"
600S162-68	50	17' 3"	15' 8"	13' 8"	19' 4"	17' 7"	15' 4"	15' 8"	14' 2"	12' 4"	17' 7"	16' 0"	14' 0"
600S162-97	50	19' 1"	17' 4"	15' 2"	21' 6"	19' 6"	17' 0"	17' 4"	15' 9"	13' 9"	19' 6"	17' 8"	15' 6"
600S162-118	50	20' 2"	18' 3"	16' 0"	22' 8"	20' 7"	18' 0"	18' 3"	16' 8"	14' 7"	20' 7"	18' 8"	16' 3"
600S200-33	33	13' 4"e	11' 7"e	9' 6"e	13' 2"	11' 2"	8' 8"e	13' 1"e	11' 7"e	9' 6"e	13' 2"	11' 2"	8' 8"e
600S200-43	33	15' 9"	13' 10"	11' 3"e	16' 0"	13' 10"	11' 3"	14' 3"	13' 0"	11' 3"e	16' 0"	13' 10"	11' 3"
600S200-43 (50)	50	15' 9"	14' 3"	12' 6"	17' 8"	15' 10"	13' 0"	14' 3"	13' 0"	11' 4"	16' 1"	14' 7"	12' 9"
600S200-54	50	16' 10"	15' 4"	13' 4"	19' 0"	17' 2"	15' 1"	15' 4"	14' 0"	12' 2"	17' 2"	15' 8"	13' 8"
600S200-68	50	18' 1"	16' 6"	14' 4"	20' 4"	18' 6"	16' 2"	16' 6"	15' 0"	13' 1"	18' 6"	16' 9"	14' 8"
600S200-97	50	20' 1"	18' 3"	16' 0"	22' 7"	20' 6"	17' 10"	18' 3"	16' 7"	14' 6"	20' 6"	18' 8"	16' 3"
600S200-118	50	21' 3"	19' 4"	16' 10"	23' 10"	21' 8"	19' 0"	19' 4"	17' 7"	15' 4"	21' 8"	19' 8"	17' 2"
600S250-43	33	16' 4"	14' 2"	11' 7"e	16' 4"	14' 2"	11' 7"	15' 0"	13' 7"	11' 7"e	16' 4"	14' 2"	11' 7"
600S250-43 (50)	50	16' 3"	14' 9"	12' 10"	18' 3"	16' 2"	13' 2"	14' 9"	13' 4"	11' 8"	16' 7"	15' 1"	13' 2"
600S250-54	50	17' 7"	16' 0"	14' 0"	19' 9"	18' 0"	15' 6"	16' 0"	14' 7"	12' 8"	18' 0"	16' 3"	14' 3"
600S250-68	50	19' 0"	17' 3"	15' 1"	21' 4"	19' 4"	17' 0"	17' 3"	15' 8"	13' 8"	19' 4"	17' 7"	15' 4"
600S250-97	50	21' 2"	19' 2"	16' 9"	23' 8"	21' 7"	18' 9"	19' 2"	17' 6"	15' 3"	21' 7"	19' 7"	17' 1"
600S250-118	50	22' 4"	20' 4"	17' 9"	25' 1"	22' 9"	20' 0"	20' 4"	18' 6"	16' 2"	22' 9"	20' 9"	18' 1"
600S300-54	50	18' 0"	16' 4"	14' 3"	20' 2"	18' 4"	15' 8"	16' 4"	14' 10"	13' 0"	18' 4"	16' 8"	14' 7"
600S300-68	50	19' 7"	17' 9"	15' 7"	22' 0"	20' 0"	17' 6"	17' 9"	16' 2"	14' 2"	20' 0"	18' 2"	15' 10"
600S300-97	50	22' 0"	20' 0"	17' 6"	24' 8"	22' 4"	19' 7"	20' 0"	18' 2"	15' 10"	22' 4"	20' 4"	17' 9"
600S300-118	50	23' 4"	21' 3"	18' 7"	26' 3"	23' 10"	20' 9"	21' 3"	19' 3"	16' 10"	23' 10"	21' 8"	18' 10"
800S137-33	33	13' 4"e	11' 7"e	9' 4"e	12' 4"e	10' 3"e	7' 8"e	13' 4"e	11' 7"e	9' 4"e	12' 4"e	10' 3"e	7' 8"e
800S137-43	33	16' 2"	14' 0"	11' 6"e	16' 2"	14' 0"	11' 2"	16' 2"	14' 0"	11' 6"e	16' 2"	14' 0"	11' 2"
800S137-43 (50)	50	17' 10"	16' 0"	13' 0"	18' 6"	16' 0"	12' 7"	16' 2"	14' 8"	12' 10"	18' 2"	16' 0"	12' 7"
800S137-54	50	19' 4"	17' 7"	15' 4"	21' 8"	18' 10"	15' 4"	17' 7"	16' 0"	14' 0"	19' 8"	17' 10"	15' 4"
800S137-68	50	20' 10"	19' 0"	16' 7"	23' 6"	21' 4"	18' 2"	19' 0"	17' 3"	15' 1"	21' 4"	19' 4"	17' 0"
800S137-97	50	23' 2"	21' 1"	18' 4"	26' 1"	23' 8"	20' 8"	21' 1"	19' 2"	16' 8"	23' 8"	21' 6"	18' 9"
800S162-33	33	14' 6"e	12' 7"e	10' 3"e	13' 0"e	10' 8"e	8' 0"e	14' 6"e	12' 7"e	10' 3"e	13' 0"e	10' 8"e	8' 0"e
800S162-43	33	17' 6"	15' 1"e	12' 4"e	17' 6"	14' 10"	11' 9"	17' 0"	15' 1"e	12' 4"e	17' 6"	14' 10"	11' 9"
800S162-43 (50)	50	18' 7"	16' 10"	14' 1"	19' 7"	16' 7"	13' 0"	16' 10"	15' 4"	13' 4"	19' 0"	16' 7"	13' 0"
800S162-54	50	20' 1"	18' 3"	16' 0"	22' 7"	20' 3"	16' 6"	18' 3"	16' 7"	14' 6"	20' 6"	18' 8"	16' 3"
800S162-68	50	21' 9"	19' 9"	17' 3"	24' 4"	22' 2"	19' 4"	19' 9"	18' 0"	15' 8"	22' 2"	20' 2"	17' 7"
800S162-97	50	24' 2"	22' 0"	19' 2"	27' 2"	24' 8"	21' 6"	22' 0"	20' 0"	17' 4"	24' 8"	22' 4"	19' 7"
800S162-118	50	25' 7"	23' 3"	20' 3"	28' 8"	26' 1"	22' 9"	23' 3"	21' 1"	18' 6"	26' 1"	23' 8"	20' 8"
800S200-43	33	18' 8"	16' 2"e	13' 2"e	18' 8"	16' 2"	12' 10"e	18' 0"	16' 2"e	13' 2"e	18' 8"	16' 2"	12' 10"e
800S200-43 (50)	50	19' 9"	18' 0"	15' 1"e	21' 3"	18' 1"	14' 1"	18' 0"	16' 3"	14' 3"	20' 2"	18' 1"	14' 1"
800S200-54	50	21' 2"	19' 3"	16' 10"	23' 9"	21' 7"	17' 7"	19' 3"	17' 6"	15' 3"	21' 8"	19' 8"	17' 2"
800S200-68	50	22' 9"	20' 8"	18' 1"	25' 7"	23' 3"	20' 3"	20' 8"	18' 9"	16' 4"	23' 3"	21' 1"	18' 6"
800S200-97	50	25' 4"	23' 0"	20' 1"	28' 6"	25' 10"	22' 7"	23' 0"	20' 10"	18' 3"	25' 10"	23' 6"	20' 6"
800S200-118	50	26' 10"	24' 4"	21' 3"	30' 2"	27' 4"	23' 10"	24' 4"	22' 2"	19' 4"	27' 4"	24' 10"	21' 8"
800S250-43	33	19' 2"e	16' 7"e	13' 7"e	19' 2"	16' 7"	13' 0"e	18' 8"	16' 7"e	13' 7"e	19' 2"	16' 7"	13' 0"e
800S250-43 (50)	50	20' 4"	18' 6"	15' 4"e	21' 6"	18' 2"	14' 1"	18' 6"	16' 9"	14' 8"e	20' 9"	18' 2"	14' 1"
800S250-54	50	22' 0"	20' 0"	17' 6"	24' 8"	22' 1"	18' 1"	20' 0"	18' 2"	15' 10"	22' 6"	20' 4"	17' 9"
800S250-68	50	23' 9"	21' 7"	18' 10"	26' 8"	24' 3"	21' 2"	21' 7"	19' 8"	17' 2"	24' 3"	22' 1"	19' 3"
800S250-97	50	26' 6"	24' 1"	21' 0"	29' 9"	27' 0"	23' 7"	24' 1"	21' 10"	19' 1"	27' 0"	24' 7"	21' 6"
800S250-118	50	28' 1"	25' 6"	22' 3"	31' 6"	28' 8"	25' 0"	25' 6"	23' 2"	20' 3"	28' 8"	26' 0"	22' 9"
800S300-54	50	22' 6"	20' 4"	17' 9"	25' 2"	22' 4"	18' 3"	20' 4"	18' 7"	16' 2"	22'10"	20' 9"	18' 2"
800S300-68	50	24' 6"	22' 3"	19' 4"	27' 6"	25' 0"	21' 6"	22' 3"	20' 2"	17' 8"	25' 0"	22' 8"	19' 9"
800S300-97	50	27' 6"	25' 0"	21' 9"	30' 10"	28' 0"	24' 6"	25' 0"	22' 8"	19' 9"	28' 0"	25' 6"	22' 2"
800S300-118	50	29' 2"	26' 7"	23' 2"	32' 9"	29' 9"	26' 1"	26' 7"	24' 1"	21' 1"	29' 9"	27' 1"	23' 8"
1000S162-33	33	15' 10"e	13' 9"e	9' 4"e	12' 8"e	10' 1"e	7' 1"e	15' 10"e	13' 9"e	9' 4"e	12' 8"e	10' 1"e	7' 1"e
1000S162-43	33	19' 4"e	16' 9"e	13' 8"e	18' 9"e	15' 9"e	12' 1"e	19' 4"e	16' 9"e	13' 8"e	18' 9"e	15' 9"e	12' 1"e
1000S162-43	50	22' 0"e	19' 0"e	15' 6"e	20' 8"e	17' 3"e	13' 1"e	20' 0"e	18' 2"e	15' 6"e	20' 8"e	17' 3"e	13' 1"e
1000S162-54	50	23' 10"	21' 8"	18' 3"	25' 10"	22' 6"	18' 1"	21' 8"	19' 9"	17' 3"	24' 4"	22' 2"	18' 1"
1000S162-68	50	26' 0"	23' 7"	20' 7"	29' 2"	26' 6"	21' 8"	23' 7"	21' 4"	18' 8"	26' 6"	24' 1"	21' 0"
1000S162-97	50	29' 1"	26' 6"	23' 1"	32' 8"	29' 8"	26' 0"	26' 6"	24' 0"	21' 0"	29' 8"	27' 0"	23' 7"
1000S162-118	50	30' 10"	28' 0"	24' 6"	34' 7"	31' 6"	27' 6"	28' 0"	25' 6"	22' 3"	31' 6"	28' 7"	25' 0"
1000S200-43	33	20' 10"e	18' 1"e	14' 9"e	19' 9"e	16' 6"e	12' 7"e	20' 10"e	18' 1"e	14' 9"e	19' 9"e	16' 6"e	12' 7"e
1000S200-43	50	23' 1"e	20' 6"e	16' 9"e	21' 10"e	18' 1"e	13' 7"e	20' 10"e	19' 0"e	16' 7"e	21' 10"e	18' 1"e	13' 7"e
1000S200-54	50	25' 0"	22' 8"	19' 8"	27' 9"	23' 8"	18' 8"	22' 8"	20' 7"	18' 0"	25' 6"	23' 2"	18' 8"
1000S200-68	50	27' 1"	24' 7"	21' 6"	30' 4"	27' 8"	23' 2"	24' 7"	22' 4"	19' 7"	27' 8"	25' 1"	22' 0"
1000S200-97	50	30' 4"	27' 7"	24' 1"	34' 2"	31' 0"	27' 1"	27' 7"	25' 1"	21' 10"	31' 0"	28' 2"	24' 7"
1000S200-118	50	32' 3"	29' 3"	25' 7"	36' 2"	32' 10"	28' 8"	29' 3"	26' 7"	23' 3"	32' 10"	29' 10"	26' 1"
1000S250-43	33	21' 6"e	18' 7"e	15' 2"e	20' 6"e	17' 1"e	13' 0"e	21' 6"e	18' 7"e	15' 2"e	20' 6"e	17' 1"e	13' 0"e
1000S250-43 (50)	50	24' 0"e	21' 1"e	17' 2"e	22' 3"e	18' 4"e	13' 9"e	21' 9"e	19' 9"e	17' 2"e	22' 3"e	18' 4"e	13' 9"e
1000S250-54	50	26' 3"	23' 10"	20' 2"	28' 7"	24' 8"	19' 6"	23' 10"	21' 8"	19' 0"	26' 9"	24' 4"	19' 6"

NOTE: See page 43 for Table Notes.

For more information, please contact Marino\WARE® Technical Services at 866.545.1545
This technical information reflects the most current information available and supersedes any and all previous publications effective February 17, 2023 | MW-Cold Formed Catalog | © WARE Industries, Inc., 2023

10 psf Dead Load and 30 psf Live Load

MEMBER	F_y (ksi)	LIVE LOAD DEFLECTION L/360						Live Load Deflection L/480					
		SINGLE SPAN			TWO EQUAL SPANS			SINGLE SPAN			TWO EQUAL SPANS		
		JOIST SPACING (in.) o.c.			JOIST SPACING (in.) o.c.			JOIST SPACING (in.) o.c.			JOIST SPACING (in.) o.c.		
		12	16	24	12	16	24	12	16	24	12	16	24
1000S250-68	50	28' 4"	25' 9"	22' 7"	31' 10"	29' 0"	23' 9"	25' 9"	23' 6"	20' 6"	29' 0"	26' 3"	23' 0"
1000S250-97	50	31' 8"	28' 9"	25' 1"	35' 7"	32' 3"	28' 2"	28' 9"	26' 2"	22' 9"	32' 3"	29' 4"	25' 7"
1000S250-118	50	33' 7"	30' 6"	26' 8"	37' 8"	34' 3"	30' 0"	30' 6"	27' 9"	24' 2"	34' 3"	31' 2"	27' 2"
1000S300-54	50	26' 9"	24' 3"	20' 7"	29' 1"	24' 9"	19' 7"	24' 3"	22' 1"	19' 3"	27' 3"	24' 9"	19' 7"
1000S300-68	50	29' 2"	26' 6"	23' 1"	32' 8"	29' 8"	24' 2"	26' 6"	24' 1"	21' 0"	29' 8"	27' 0"	23' 7"
1000S300-97	50	32' 9"	29' 9"	26' 0"	36' 9"	33' 4"	29' 2"	29' 9"	27' 0"	23' 7"	33' 4"	30' 3"	26' 6"
1000S300-118	50	34' 10"	31' 8"	27' 8"	39' 1"	35' 7"	31' 1"	31' 8"	28' 9"	25' 1"	35' 7"	32' 3"	28' 2"
1000S350-54	50	28' 3"	25' 8"	22' 4"e	31' 8"	27' 0"	21' 2"	25' 8"	23' 3"	20' 4"	28' 9"	26' 2"	21' 2"
1000S350-68	50	30' 9"	28' 0"	24' 6"	34' 7"	31' 4"	26' 10"	28' 0"	25' 6"	22' 2"	31' 4"	28' 7"	25' 0"
1000S350-97	50	34' 6"	31' 3"	27' 4"	38' 8"	35' 2"	30' 8"	31' 3"	28' 6"	24' 10"	35' 2"	32' 0"	27' 10"
1000S350-118	50	36' 7"	33' 3"	29' 1"	41' 1"	37' 4"	32' 7"	33' 3"	30' 2"	26' 4"	37' 4"	34' 0"	29' 8"
1200S162-43	33	20' 9"e	18' 0"e	14' 8"e	19' 3"e	15' 10"e	11' 9"e	20' 9"e	18' 0"e	14' 8"e	19' 3"e	15' 10"e	11' 9"e
1200S162-43 (50)	50	23' 6"e	20' 4"e	16' 7"e	20' 10"e	17' 0"e	12' 3"e	23' 0"e	20' 4"e	16' 7"e	20' 10"e	17' 0"e	12' 3"e
1200S162-54	50	27' 6"e	24' 2"e	19' 8"e	27' 10"e	24' 1"e	18' 8"e	25' 0"e	22' 8"e	19' 8"e	27' 10"e	24' 1"e	18' 8"e
1200S162-68	50	30' 0"	27' 2"	23' 6"	33' 2"	28' 9"	23' 6"	27' 2"	24' 8"	21' 7"	30' 7"	27' 9"	23' 6"
1200S162-97	50	33' 10"	30' 9"	26' 10"	38' 1"	34' 7"	30' 2"	30' 9"	28' 0"	24' 6"	34' 7"	31' 4"	27' 6"
1200S162-118	50	36' 0"	32' 8"	28' 7"	40' 6"	36' 9"	32' 1"	32' 8"	29' 9"	26' 0"	36' 9"	33' 4"	29' 2"
1200S200-54	50	28' 8"e	26' 1"e	21' 4"e	29' 6"e	24' 10"e	19' 2"e	26' 1"e	23' 8"e	20' 8"e	29' 3"e	24' 10"e	19' 2"e
1200S200-68	50	31' 2"	28' 4"	24' 9"	35' 1"	30' 10"	25' 3"	28' 4"	25' 9"	22' 6"	31' 10"	28' 10"	25' 3"
1200S200-97	50	35' 3"	32' 1"	28' 0"	39' 8"	36' 0"	31' 6"	32' 1"	29' 2"	25' 6"	36' 0"	32' 8"	28' 7"
1200S200-118	50	37' 7"	34' 1"	29' 9"	42' 2"	38' 3"	33' 6"	34' 1"	31' 0"	27' 1"	38' 3"	34' 9"	30' 4"
1200S250-54	50	29' 10"e	27' 0"e	22' 1"e	30' 0"e	25' 2"e	19' 6"e	27' 2"e	24' 8"e	21' 7"e	30' 0"e	25' 2"e	19' 6"e
1200S250-68	50	32' 6"	29' 7"	25' 9"	36' 6"	31' 10"	25' 9"	29' 7"	26' 10"	23' 6"	33' 2"	30' 2"	25' 9"
1200S250-97	50	36' 8"	33' 4"	29' 2"	41' 2"	37' 6"	32' 8"	33' 4"	30' 3"	26' 6"	37' 6"	34' 0"	29' 8"
1200S250-118	50	39' 0"	35' 4"	31' 0"	43' 9"	39' 9"	34' 8"	35' 4"	32' 2"	28' 1"	39' 9"	36' 1"	31' 7"
1200S300-54	50	31' 0"e	27' 6"e	22' 6"e	30' 8"e	25' 9"e	19' 9"e	28' 2"e	25' 7"e	22' 3"e	30' 8"e	25' 9"e	19' 9"e
1200S300-68	50	33' 9"	30' 8"	26' 7"	37' 7"	32' 7"	26' 7"	30' 8"	27' 10"	24' 4"	34' 6"	31' 3"	26' 7"
1200S300-97	50	38' 0"	34' 6"	30' 1"	42' 7"	38' 8"	33' 9"	34' 6"	31' 4"	27' 4"	38' 8"	35' 2"	30' 8"
1200S300-118	50	40' 4"	36' 8"	32' 0"	45' 3"	41' 2"	36' 0"	36' 8"	33' 3"	29' 1"	41' 2"	37' 4"	32' 8"
1200S350-54	50	32' 7"e	29' 7"e	25' 2"e	33' 3"e	27' 9"e	21' 1"e	29' 7"e	26' 10"e	23' 6"e	33' 3"e	27' 9"e	21' 1"e
1200S350-68	50	35' 7"	32' 4"	28' 3"	40' 0"	36' 2"	29' 3"	32' 4"	29' 4"	25' 8"	36' 3"	33' 0"	28' 9"
1200S350-97	50	39' 9"	36' 2"	31' 7"	44' 8"	40' 7"	35' 6"	36' 2"	32' 10"	28' 8"	40' 7"	36' 10"	32' 2"
1200S350-118	50	42' 3"	38' 4"	33' 7"	47' 6"	43' 2"	37' 8"	38' 4"	34' 10"	30' 6"	43' 2"	39' 2"	34' 2"
1400S162-54	50	29' 6"e	25' 6"e	20' 9"e	29' 6"e	24' 7"e	18' 7"e	28' 1"e	25' 6"e	20' 9"e	29' 6"e	24' 7"e	18' 7"e
1400S162-68	50	33' 9"	30' 6"	24' 10"	35' 3"	30' 6"	24' 10"	30' 8"	27' 10"	24' 4"	34' 6"	30' 6"	24' 10"
1400S162-97	50	38' 6"	34' 10"	30' 6"	43' 2"	39' 2"	32' 8"	34' 10"	31' 8"	27' 8"	39' 2"	35' 7"	31' 1"
1400S162-118	50	41' 2"	37' 4"	32' 8"	46' 2"	42' 0"	36' 8"	37' 4"	34' 0"	29' 8"	42' 0"	38' 2"	33' 3"
1400S200-54	50	32' 1"e	27' 9"e	22' 8"e	30' 6"e	25' 3"e	19' 0"e	29' 3"e	26' 7"e	22' 8"e	30' 6"e	25' 3"e	19' 0"e
1400S200-68	50	35' 2"	31' 10"	26' 10"	38' 1"	33' 0"	26' 9"	31' 10"	29' 0"	25' 4"	35' 10"	32' 7"	26' 9"
1400S200-97	50	40' 0"	36' 3"	31' 8"	44' 9"	40' 8"	35' 0"	36' 3"	33' 0"	28' 9"	40' 8"	37' 0"	32' 3"
1400S200-118	50	42' 9"	38' 10"	33' 10"	48' 0"	43' 7"	38' 1"	38' 10"	35' 3"	30' 9"	43' 7"	39' 7"	34' 7"
1400S250-54	50	33' 3"e	28' 10"e	23' 7"e	30' 10"e	25' 6"e	19' 1"e	30' 4"e	27' 7"e	23' 7"e	30' 10"e	25' 6"e	19' 1"e
1400S250-68	50	36' 7"	33' 2"	28' 0"	39' 6"	34' 1"	27' 0"	33' 2"	30' 2"	26' 4"	37' 3"	33' 10"	27' 0"
1400S250-97	50	41' 6"	37' 8"	32' 10"	46' 6"	42' 3"	36' 3"	37' 8"	34' 2"	29' 10"	42' 3"	38' 4"	33' 7"
1400S250-118	50	44' 3"	40' 2"	35' 2"	49' 8"	45' 2"	39' 6"	40' 2"	36' 7"	31' 10"	45' 2"	41' 0"	35' 10"
1400S300-54	50	34' 1"e	29' 6"e	24' 1"e	31' 1"e	25' 8"e	19' 2"e	31' 0"e	28' 1"e	24' 1"e	31' 1"e	25' 8"e	19' 2"e
1400S300-68	50	37' 6"	34' 1"	28' 7"	40' 6"	34' 7"	27' 3"	34' 1"	31' 0"	27' 1"	38' 3"	34' 7"	27' 3"
1400S300-97	50	42' 10"	38' 10"	34' 0"	48' 1"	43' 8"	37' 1"	38' 10"	35' 4"	30' 10"	43' 8"	39' 8"	34' 8"
1400S300-118	50	45' 8"	41' 6"	36' 3"	51' 3"	46' 7"	40' 8"	41' 6"	37' 9"	33' 0"	46' 7"	42' 4"	37' 0"
1400S350-54	50	36' 4"e	33' 0"e	27' 1"e	33' 8"e	27' 7"e	20' 3"e	33' 0"e	30' 0"e	26' 2"e	33' 8"e	27' 7"e	20' 3"e
1400S350-68	50	40' 2"	36' 7"	31' 10"e	45' 2"	38' 6"	30' 1"	36' 7"	33' 2"	29' 0"	41' 0"	37' 3"	30' 1"
1400S350-97	50	45' 0"	40' 10"	35' 8"	50' 6"	45' 10"	40' 1"	40' 10"	37' 1"	32' 4"	45' 10"	41' 8"	36' 4"
1400S350-118	50	47' 9"	43' 6"	38' 0"	53' 8"	48' 9"	42' 7"	43' 6"	39' 6"	34' 6"	48' 9"	44' 3"	38' 8"
1600S162-68	50	36' 10"e	32' 0"e	26' 1"e	36' 10"e	32' 0"e	26' 1"e	34' 0"e	30' 10"e	26' 1"e	36' 10"e	32' 0"e	26' 1"e
1600S162-97	50	42' 9"	38' 10"	34' 0"	48' 0"	42' 3"	34' 6"	38' 10"	35' 3"	30' 10"	43' 7"	39' 8"	34' 6"
1600S162-118	50	46' 0"	41' 9"	36' 6"	51' 7"	46' 10"	40' 2"	41' 9"	37' 10"	33' 1"	46' 10"	42' 7"	37' 2"
1600S200-68	50	39' 0"e	34' 8"e	28' 3"e	40' 1"e	34' 8"e	27' 4"e	35' 4"e	32' 2"e	28' 1"e	39' 8"e	34' 8"e	27' 4"e
1600S200-97	50	44' 4"	40' 4"	35' 3"	49' 10"	45' 3"	37' 1"	40' 4"	36' 8"	32' 0"	45' 3"	41' 2"	36' 0"
1600S200-118	50	47' 8"	43' 3"	37' 9"	53' 6"	48' 7"	42' 6"	43' 3"	39' 3"	34' 4"	48' 7"	44' 2"	38' 7"
1600S250-68	50	40' 4"e	36' 2"e	29' 6"e	41' 9"e	35' 4"e	27' 7"e	36' 8"e	33' 3"e	29' 1"e	41' 2"e	35' 4"e	27' 7"e
1600S250-97	50	46' 0"	41' 9"	36' 6"	51' 7"	46' 10"	38' 7"	41' 9"	37' 10"	33' 1"	46' 10"	42' 7"	37' 2"
1600S250-118	50	49' 3"	44' 9"	39' 1"	55' 3"	50' 3"	43' 10"	44' 9"	40' 8"	35' 6"	50' 3"	45' 8"	39' 10"
1600S300-68	50	41' 3"e	37' 2"e	30' 4"e	42' 4"e	35' 9"e	27' 9"e	37' 6"e	34' 1"e	29' 9"e	42' 1"e	35' 9"e	27' 9"e
1600S300-97	50	47' 3"	43' 0"	37' 7"	53' 1"	48' 3"	39' 7"	43' 0"	39' 1"	34' 1"	48' 3"	43' 10"	38' 3"
1600S300-118	50	50' 9"	46' 2"	40' 4"	57' 1"	51' 10"	45' 3"	46' 2"	42' 0"	36' 8"	51' 10"	47' 1"	41' 2"
1600S350-68	50	43' 7"e	39' 7"e	34' 0"e	46' 3"e	38' 9"e	29' 10"e	39' 7"e	36' 0"e	31' 4"e	44' 6"e	38' 9"e	29' 10"e
1600S350-97	50	49' 7"	45' 0"	39' 4"	55' 8"	50' 7"	43' 9"	45' 0"	40' 10"	35' 9"	50' 7"	45' 10"	40' 1"
1600S350-118	50	53' 1"	48' 3"	42' 2"	59' 7"	54' 2"	47' 3"	48' 3"	43' 9"	38' 3"	54' 2"	49' 2"	43' 0"

NOTE: See page 43 for Table Notes.

FLOOR JOIST SPANS

10 psf Dead Load and 40 psf Live Load

MEMBER	F_y (ksi)	LIVE LOAD DEFLECTION L/360						LIVE LOAD DEFLECTION L/480					
		SINGLE SPAN			TWO EQUAL SPANS			SINGLE SPAN			TWO EQUAL SPANS		
		JOIST SPACING (in.) o.c.			JOIST SPACING (in.) o.c.			JOIST SPACING (in.) o.c.			JOIST SPACING (in.) o.c.		
		12	16	24	12	16	24	12	16	24	12	16	24
600S137-33	33	10' 4"e	9' 0"e	7' 4"e	10' 2"	8' 7"	6' 8"e	10' 4"e	9' 0"e	7' 4"e	10' 2"	8' 7"	6' 8"e
600S137-43	33	12' 7"	10' 10"	8' 10"e	12' 7"	10' 10"	8' 8"	11' 10"	10' 9"	8' 10"e	12' 7"	10' 10"	8' 8"
600S137-43 (50)	50	13' 0"	11' 9"	10' 2"	14' 4"	12' 6"	10' 0"	11' 9"	10' 8"	9' 4"	13' 3"	12' 0"	10' 0"
600S137-54	50	14' 0"	12' 8"	11' 1"	15' 8"	14' 3"	11' 10"	12' 8"	11' 7"	10' 1"	14' 3"	13' 0"	11' 3"
600S137-68	50	15' 0"	13' 7"	11' 10"	16' 9"	15' 3"	13' 4"	13' 7"	12' 4"	10' 9"	15' 3"	13' 10"	12' 1"
600S137-97	50	16' 7"	15' 1"	13' 2"	18' 7"	16' 10"	14' 9"	15' 1"	13' 8"	12' 0"	16' 10"	15' 4"	13' 4"
600S162-33	33	11' 2"e	9' 8"e	7' 10"e	11' 2"	9' 6"	7' 3"e	11' 2"e	9' 8"e	7' 10"e	11' 2"	9' 6"	7' 3"e
600S162-43	33	13' 7"	12' 0"e	9' 9"e	13' 10"	12' 0"	9' 9"	12' 4"	11' 2"	9' 9"e	13' 10"	12' 0"	9' 9"
600S162-43 (50)	50	13' 7"	12' 4"	10' 9"	15' 3"	13' 4"	10' 10"	12' 4"	11' 2"	9' 9"	13' 10"	12' 7"	10' 10"
600S162-54	50	14' 7"	13' 3"	11' 7"	16' 4"	14' 10"	13' 0"	13' 3"	12' 1"	10' 6"	14' 10"	13' 6"	11' 9"
600S162-68	50	15' 8"	14' 2"	12' 4"	17' 7"	16' 0"	14' 0"	14' 2"	12' 10"	11' 3"	16' 0"	14' 6"	12' 8"
600S162-97	50	17' 4"	15' 9"	13' 9"	19' 6"	17' 8"	15' 6"	15' 9"	14' 3"	12' 6"	17' 8"	16' 1"	14' 1"
600S162-118	50	18' 3"	16' 8"	14' 7"	20' 7"	18' 8"	16' 3"	16' 8"	15' 1"	13' 2"	18' 8"	17' 0"	14' 10"
600S200-33	33	12' 0"e	10' 4"e	8' 6"e	11' 7"	9' 8"e	7' 6"e	11' 10"e	10' 4"e	8' 6"e	11' 7"	9' 8"e	7' 6"e
600S200-43	33	14' 3"	12' 4"e	10' 1"e	14' 3"	12' 4"	10' 0"	13' 0"	11' 9"	10' 1"e	14' 3"	12' 4"	10' 0"
600S200-43 (50)	50	14' 3"	13' 0"	11' 4"	16' 1"	14' 2"	11' 6"	13' 0"	11' 9"	10' 3"	14' 7"	13' 3"	11' 6"
600S200-54	50	15' 4"	14' 0"	12' 2"	17' 2"	15' 8"	13' 6"	14' 0"	12' 8"	11' 1"	15' 8"	14' 2"	12' 4"
600S200-68	50	16' 6"	15' 0"	13' 1"	18' 6"	16' 9"	14' 8"	15' 0"	13' 7"	11' 10"	16' 9"	15' 3"	13' 3"
600S200-97	50	18' 3"	16' 7"	14' 6"	20' 6"	18' 8"	16' 3"	16' 7"	15' 1"	13' 2"	18' 8"	17' 0"	14' 9"
600S200-118	50	19' 4"	17' 7"	15' 4"	21' 8"	19' 8"	17' 2"	17' 7"	16' 0"	14' 0"	19' 8"	17' 10"	15' 8"
600S250-43	33	14' 8"	12' 8"e	10' 4"e	14' 8"	12' 8"	10' 2"	13' 7"	12' 4"e	10' 4"e	14' 8"	12' 8"	10' 2"
600S250-43 (50)	50	14' 9"	13' 4"	11' 8"	16' 7"	14' 6"	11' 6"	13' 4"	12' 2"	10' 8"	15' 1"	13' 8"	11' 6"
600S250-54	50	16' 0"	14' 7"	12' 8"	18' 0"	16' 3"	13' 9"	14' 7"	13' 2"	11' 7"	16' 3"	14' 9"	13' 0"
600S250-68	50	17' 3"	15' 8"	13' 8"	19' 4"	17' 7"	15' 4"	15' 8"	14' 3"	12' 6"	17' 7"	16' 0"	14' 0"
600S250-97	50	19' 2"	17' 6"	15' 3"	21' 7"	19' 7"	17' 1"	17' 6"	15' 10"	13' 10"	19' 7"	17' 9"	15' 7"
600S250-118	50	20' 4"	18' 6"	16' 2"	22' 9"	20' 9"	18' 1"	18' 6"	16' 9"	14' 8"	20' 9"	18' 10"	16' 6"
600S300-54	50	16' 4"	14' 10"	13' 0"	18' 4"	16' 8"	14' 0"	14' 10"	13' 6"	11' 9"	16' 8"	15' 2"	13' 3"
600S300-68	50	17' 9"	16' 2"	14' 2"	20' 0"	18' 2"	15' 10"	16' 2"	14' 8"	12' 10"	18' 2"	16' 6"	14' 4"
600S300-97	50	20' 0"	18' 2"	15' 10"	22' 4"	20' 4"	17' 9"	18' 2"	16' 6"	14' 4"	20' 4"	18' 6"	16' 2"
600S300-118	50	21' 3"	19' 3"	16' 10"	23' 10"	21' 8"	18' 10"	19' 3"	17' 6"	15' 3"	21' 8"	19' 8"	17' 2"
800S137-33	33	12' 0"e	10' 4"e	8' 6"e	10' 9"e	8' 9"e	6' 6"e	12' 0"e	10' 4"e	8' 6"e	10' 9"e	8' 9"e	6' 6"e
800S137-43	33	14' 6"	12' 7"e	10' 3"e	14' 6"	12' 4"	9' 9"	14' 6"	12' 7"e	10' 3"e	14' 6"	12' 4"	9' 9"
800S137-43 (50)	50	16' 2"	14' 3"	11' 8"e	16' 6"	14' 1"	11' 0"	14' 8"	13' 4"	11' 8"e	16' 6"	14' 1"	11' 0"
800S137-54	50	17' 7"	16' 0"	13' 9"	19' 6"	16' 10"	13' 9"	16' 0"	14' 6"	12' 8"	17' 10"	16' 3"	13' 9"
800S137-68	50	19' 0"	17' 3"	15' 1"	21' 4"	19' 4"	16' 2"	17' 3"	15' 8"	13' 8"	19' 4"	17' 7"	15' 4"
800S137-97	50	21' 1"	19' 2"	16' 8"	23' 8"	21' 6"	18' 9"	19' 2"	17' 4"	15' 2"	21' 6"	19' 7"	17' 1"
800S162-33	33	13' 0"e	11' 2"e	9' 2"e	11' 2"e	9' 1"e	6' 8"e	13' 0"e	11' 2"e	9' 2"e	11' 2"e	9' 1"e	6' 8"e
800S162-43	33	15' 7"e	13' 6"e	11' 1"e	15' 4"	13' 1"	10' 3"e	15' 6"e	13' 6"e	11' 1"e	15' 4"	13' 1"	10' 3"e
800S162-43 (50)	50	16' 10"	15' 4"	12' 7"e	17' 2"	14' 7"	11' 3"	15' 4"	13' 10"	12' 2"e	17' 2"	14' 7"	11' 3"
800S162-54	50	18' 3"	16' 7"	14' 6"	20' 6"	18' 1"	14' 9"	16' 7"	15' 1"	13' 2"	18' 8"	17' 0"	14' 9"
800S162-68	50	19' 9"	18' 0"	15' 8"	22' 2"	20' 2"	17' 3"	18' 0"	16' 3"	14' 3"	20' 2"	18' 3"	16' 0"
800S162-97	50	22' 0"	20' 0"	17' 4"	24' 8"	22' 4"	19' 7"	20' 0"	18' 1"	15' 9"	22' 4"	20' 4"	17' 9"
800S162-118	50	23' 3"	21' 1"	18' 6"	26' 1"	23' 8"	20' 8"	21' 1"	19' 2"	16' 9"	23' 8"	21' 6"	18' 9"
800S200-43	33	16' 8"e	14' 6"e	11' 9"e	16' 8"	14' 6"	11' 3"e	16' 3"e	14' 6"e	11' 9"e	16' 8"	14' 6"	11' 3"e
800S200-43 (50)	50	18' 0"	16' 3"	13' 6"e	18' 9"	15' 9"	12' 1"	16' 3"	14' 9"	13' 0"e	18' 3"	15' 9"	12' 1"
800S200-54	50	19' 3"	17' 6"	15' 3"	21' 8"	19' 3"	15' 9"	17' 6"	15' 10"	13' 10"	19' 8"	17' 10"	15' 7"
800S200-68	50	20' 8"	18' 9"	16' 4"	23' 3"	21' 1"	18' 6"	18' 9"	17' 1"	14' 10"	21' 1"	19' 2"	16' 9"
800S200-97	50	23' 0"	20' 10"	18' 3"	25' 10"	23' 6"	20' 6"	20' 10"	19' 0"	16' 7"	23' 6"	21' 4"	18' 8"
800S200-118	50	24' 4"	22' 2"	19' 4"	27' 4"	24' 10"	21' 8"	22' 2"	20' 2"	17' 7"	24' 10"	22' 7"	19' 9"
800S250-43	33	17' 2"e	14' 10"e	12' 1"e	17' 2"	14' 7"	11' 3"e	17' 0"e	14' 10"e	12' 1"e	17' 2"	14' 7"	11' 3"e
800S250-43 (50)	50	18' 6"	16' 9"	13' 9"e	18' 10"	15' 10"	12' 2"	16' 9"	15' 3"	13' 3"e	18' 10"	15' 10"	12' 2"
800S250-54	50	20' 0"	18' 2"	15' 10"	22' 6"	19' 9"	16' 2"	18' 2"	16' 6"	14' 4"	20' 4"	18' 7"	16' 2"
800S250-68	50	21' 7"	19' 8"	17' 2"	24' 3"	22' 1"	18' 10"	19' 8"	17' 10"	15' 7"	22' 1"	20' 0"	17' 6"
800S250-97	50	24' 1"	21' 10"	19' 1"	27' 0"	24' 7"	21' 6"	21' 10"	19' 10"	17' 4"	24' 7"	22' 3"	19' 6"
800S250-118	50	25' 6"	23' 2"	20' 3"	28' 8"	26' 0"	22' 9"	23' 2"	21' 1"	18' 4"	26' 0"	23' 8"	20' 8"
800S300-54	50	20' 4"	18' 7"	16' 2"	22' 10"	20' 1"	16' 4"	18' 7"	16' 10"	14' 8"	20' 9"	18' 10"	16' 4"
800S300-68	50	22' 3"	20' 2"	17' 8"	25' 0"	22' 8"	19' 2"	20' 2"	18' 4"	16' 0"	22' 8"	20' 7"	18' 0"
800S300-97	50	25' 0"	22' 8"	19' 9"	28' 0"	25' 6"	22' 2"	22' 8"	20' 7"	18' 0"	25' 6"	23' 1"	20' 2"
800S300-118	50	26' 7"	24' 1"	21' 1"	29' 9"	27' 1"	23' 8"	24' 1"	21' 10"	19' 2"	27' 1"	24' 7"	21' 6"
1000S162-33	33	14' 3"e	11' 3"e	7' 6"e	10' 7"e	8' 3"e	5' 9"e	14' 3"e	11' 3"e	7' 6"e	10' 7"e	8' 3"e	5' 9"e
1000S162-43	33	17' 3"e	15' 0"e	12' 2"e	16' 4"e	13' 8"e	10' 4"e	17' 3"e	15' 0"e	12' 2"e	16' 4"e	13' 8"e	10' 4"e
1000S162-43 (50)	50	19' 7"e	17' 0"e	13' 10"e	18' 0"e	14' 10"e	11' 1"e	18' 2"e	16' 6"e	13' 10"e	18' 0"e	14' 10"e	11' 1"e
1000S162-54	50	21' 8"	19' 9"	16' 4"	23' 2"	20' 1"	15' 10"	19' 9"	17' 10"	15' 8"	22' 2"	20' 1"	15' 10"
1000S162-68	50	23' 7"	21' 4"	18' 8"	26' 6"	23' 8"	19' 4"	21' 4"	19' 6"	17' 0"	24' 1"	21' 10"	19' 1"
1000S162-97	50	26' 6"	24' 0"	21' 0"	29' 8"	27' 0"	23' 7"	24' 0"	21' 9"	19' 1"	27' 0"	24' 6"	21' 4"
1000S162-118	50	28' 0"	25' 6"	22' 3"	31' 6"	28' 7"	25' 0"	25' 6"	23' 1"	20' 2"	28' 7"	26' 0"	22' 8"
1000S200-43	33	18' 8"e	16' 2"e	13' 2"e	17' 2"e	14' 3"e	10' 8"e	18' 8"e	16' 2"e	13' 2"e	17' 2"e	14' 3"e	10' 8"e
1000S200-43 (50)	50	20' 10"e	18' 4"e	15' 0"e	18' 10"e	15' 6"e	11' 4"e	19' 0"e	17' 3"e	15' 0"e	18' 10"e	15' 6"e	11' 4"e
1000S200-54	50	22' 8"	20' 7"	17' 7"e	24' 7"	20' 10"	16' 4"	20' 7"	18' 9"	16' 4"	23' 2"	20' 10"	16' 4"
1000S200-68	50	24' 7"	22' 4"	19' 7"	27' 8"	25' 1"	20' 8"	22' 4"	20' 3"	17' 9"	25' 1"	22' 9"	19' 10"
1000S200-97	50	27' 7"	25' 1"	21' 10"	31' 0"	28' 2"	24' 7"	25' 1"	22' 9"	19' 10"	28' 2"	25' 7"	22' 4"
1000S200-118	50	29' 3"	26' 7"	23' 3"	32' 10"	29' 10"	26' 1"	26' 7"	24' 2"	21' 1"	29' 10"	27' 2"	23' 8"

NOTE: See page 43 for Table Notes.

For more information, please contact Marino\WARE® Technical Services at 866.545.1545
This technical information reflects the most current information available and supersedes any and all
previous publications effective February 17, 2023 | MW-Cold Formed Catalog | © WARE Industries, Inc., 2023

FLOOR JOIST SPANS

10 psf Dead Load and 40 psf Live Load

MEMBER	F_y (ksi)	LIVE LOAD DEFLECTION L/360						LIVE LOAD DEFLECTION L/480					
		SINGLE SPAN			TWO EQUAL SPANS			SINGLE SPAN			TWO EQUAL SPANS		
		JOIST SPACING (in.) o.c.			JOIST SPACING (in.) o.c.			JOIST SPACING (in.) o.c.			JOIST SPACING (in.) o.c.		
		12	16	24	12	16	24	12	16	24	12	16	24
1000S250-43	33	19' 2"e	16' 7"e	13' 7"e	17' 9"e	14' 8"e	11' 0"e	19' 2"e	16' 7"e	13' 7"e	17' 9"e	14' 8"e	11' 0"e
1000S250-43 (50)	50	21' 9"e	18' 9"e	15' 4"e	19' 3"e	15' 9"e	11' 7"e	19' 9"e	18' 0"e	15' 4"e	19' 3"e	15' 9"e	11' 7"e
1000S250-54	50	23' 10"	21' 8"	18' 1"e	25' 7"	21' 8"	17' 0"	21' 8"	19' 8"	17' 2"e	24' 4"	21' 8"	17' 0"
1000S250-68	50	25' 9"	23' 6"	20' 6"	29' 0"	26' 1"	21' 3"	23' 6"	21' 3"	18' 7"	26' 3"	23' 10"	20' 10"
1000S250-97	50	28' 9"	26' 2"	22' 9"	32' 3"	29' 4"	25' 7"	26' 2"	23' 9"	20' 9"	29' 4"	26' 8"	23' 3"
1000S250-118	50	30' 6"	27' 9"	24' 2"	34' 3"	31' 2"	27' 2"	27' 9"	25' 2"	22' 0"	31' 2"	28' 3"	24' 8"
1000S300-54	50	24' 3"	22' 1"	18' 4"e	25' 9"	21' 9"	17' 1"	22' 1"	20' 1"	17' 6"e	24' 9"	21' 9"	17' 1"
1000S300-68	50	26' 6"	24' 1"	21' 0"	29' 8"	26' 6"	21' 8"	24' 1"	21' 10"	19' 1"	27' 0"	24' 6"	21' 4"
1000S300-97	50	29' 9"	27' 0"	23' 7"	33' 4"	30' 3"	26' 6"	27' 0"	24' 7"	21' 6"	30' 3"	27' 7"	24' 1"
1000S300-118	50	31' 8"	28' 9"	25' 1"	35' 7"	32' 3"	28' 2"	28' 9"	26' 2"	22' 9"	32' 3"	29' 4"	25' 7"
1000S350-54	50	25' 8"	23' 3"	20' 4"e	28' 1"	23' 8"	18' 3"	23' 3"	21' 2"	18' 6"e	26' 2"	23' 8"	18' 3"
1000S350-68	50	28' 0"	25' 6"	22' 2"	31' 4"	28' 7"	24' 0"	25' 6"	23' 1"	20' 2"	28' 7"	26' 0"	22' 8"
1000S350-97	50	31' 3"	28' 6"	24' 10"	35' 2"	32' 0"	27' 10"	28' 6"	25' 10"	22' 7"	32' 0"	29' 0"	25' 4"
1000S350-118	50	33' 3"	30' 2"	26' 4"	37' 4"	34' 0"	29' 8"	30' 2"	27' 6"	24' 0"	34' 0"	30' 9"	26' 10"
1200S162-43	33	18' 7"e	16' 1"e	13' 2"e	16' 7"e	13' 6"e	9' 9"e	18' 7"e	16' 1"e	13' 2"e	16' 7"e	13' 6"e	9' 9"e
1200S162-43 (50)	50	21' 0"e	18' 2"e	13' 10"e	17' 9"e	14' 3"e	10' 2"e	20' 10"e	18' 2"e	13' 10"e	17' 9"e	14' 3"e	10' 2"e
1200S162-54	50	25' 0"e	21' 7"e	17' 8"e	25' 0"e	21' 0"e	16' 1"e	22' 8"e	20' 7"e	17' 8"e	25' 0"e	21' 0"e	16' 1"e
1200S162-68	50	27' 2"	24' 8"	21' 0"	29' 8"	25' 8"	21' 0"	24' 8"	22' 6"	19' 7"	27' 9"	25' 2"	21' 0"
1200S162-97	50	30' 9"	28' 0"	24' 6"	34' 7"	31' 4"	27' 2"	28' 0"	25' 6"	22' 2"	31' 4"	28' 7"	25' 0"
1200S162-118	50	32' 8"	29' 9"	26' 0"	36' 9"	33' 4"	29' 2"	29' 9"	27' 0"	23' 7"	33' 4"	30' 3"	26' 6"
1200S200-54	50	26' 1"e	23' 4"e	19' 1"e	25' 10"e	21' 8"e	16' 6"e	23' 8"e	21' 6"e	18' 9"e	25' 10"e	21' 8"e	16' 6"e
1200S200-68	50	28' 4"	25' 9"	22' 6"	31' 10"	27' 8"	22' 7"	25' 9"	23' 4"	20' 6"	28' 10"	26' 3"	22' 7"
1200S200-97	50	32' 1"	29' 2"	25' 6"	36' 0"	32' 8"	28' 7"	29' 2"	26' 6"	23' 2"	32' 8"	29' 8"	26' 0"
1200S200-118	50	34' 1"	31' 0"	27' 1"	38' 3"	34' 9"	30' 4"	31' 0"	28' 2"	24' 7"	34' 9"	31' 7"	27' 7"
1200S250-54	50	27' 2"e	24' 2"e	19' 8"e	26' 2"e	21' 10"e	16' 8"e	24' 8"e	22' 6"e	19' 7"e	26' 2"e	21' 10"e	16' 8"e
1200S250-68	50	29' 7"	26' 10"	23' 3"	33' 0"	28' 6"	22' 8"	26' 10"	24' 4"	21' 3"	30' 2"	27' 4"	22' 8"
1200S250-97	50	33' 4"	30' 3"	26' 6"	37' 6"	34' 0"	29' 8"	30' 3"	27' 6"	24' 1"	34' 0"	30' 10"	27' 0"
1200S250-118	50	35' 4"	32' 2"	28' 1"	39' 9"	36' 1"	31' 7"	32' 2"	29' 3"	25' 7"	36' 1"	32' 9"	28' 8"
1200S300-54	50	28' 2"e	24' 7"e	20' 1"e	26' 9"e	22' 4"e	17' 0"e	25' 7"e	23' 2"e	20' 1"e	26' 9"e	22' 4"e	17' 0"e
1200S300-68	50	30' 8"	27' 10"	23' 9"	33' 7"	29' 1"	23' 8"	27' 10"	25' 4"	22' 1"	31' 3"	28' 6"	23' 8"
1200S300-97	50	34' 6"	31' 4"	27' 4"	38' 8"	35' 2"	30' 8"	31' 4"	28' 6"	24' 10"	35' 2"	32' 0"	27' 10"
1200S300-118	50	36' 8"	33' 3"	29' 1"	41' 2"	37' 4"	32' 8"	33' 3"	30' 3"	26' 4"	37' 4"	34' 0"	29' 8"
1200S350-54	50	29' 7"e	26' 10"e	22' 6"e	29' 0"e	24' 0"e	18' 0"e	26' 10"e	24' 6"e	21' 4"e	29' 0"e	24' 0"e	18' 0"e
1200S350-68	50	32' 4"	29' 4"	25' 8"e	36' 3"	32' 4"	25' 8"	29' 4"	26' 8"	23' 3"	33' 0"	30' 0"	25' 8"
1200S350-97	50	36' 2"	32' 10"	28' 8"	40' 7"	36' 10"	32' 2"	32' 10"	29' 9"	26' 1"	36' 10"	33' 6"	29' 3"
1200S350-118	50	38' 4"	34' 10"	30' 6"	43' 2"	39' 2"	34' 2"	34' 10"	31' 8"	27' 8"	39' 2"	35' 7"	31' 1"
1400S162-54	50	26' 4"e	22' 9"e	18' 7"e	25' 8"e	21' 1"e	15' 8"e	25' 7"e	22' 9"e	18' 7"e	25' 8"e	21' 1"e	15' 8"e
1400S162-68	50	30' 8"	27' 3"	22' 3"	31' 6"	27' 3"	22' 3"	27' 10"	25' 3"	22' 1"	31' 3"	27' 3"	22' 3"
1400S162-97	50	34' 10"	31' 8"	27' 8"	39' 2"	35' 7"	29' 2"	31' 8"	28' 9"	25' 2"	35' 7"	32' 4"	28' 3"
1400S162-118	50	37' 4"	34' 0"	29' 8"	42' 0"	38' 2"	33' 3"	34' 0"	30' 10"	27' 0"	38' 2"	34' 8"	30' 3"
1400S200-54	50	28' 8"e	24' 9"e	20' 3"e	26' 4"e	21' 8"e	16' 0"e	26' 7"e	24' 2"e	20' 3"e	26' 4"e	21' 8"e	16' 0"e
1400S200-68	50	31' 10"	29' 0"	24' 1"e	34' 1"	29' 6"	23' 4"	29' 0"	26' 4"	23' 0"	32' 7"	29' 6"	23' 4"
1400S200-97	50	36' 3"	33' 0"	28' 9"	40' 8"	37' 0"	31' 3"	33' 0"	30' 0"	26' 2"	37' 0"	33' 7"	29' 4"
1400S200-118	50	38' 10"	35' 3"	30' 9"	43' 7"	39' 7"	34' 7"	35' 3"	32' 1"	28' 0"	39' 7"	36' 0"	31' 6"
1400S250-54	50	29' 9"e	25' 9"e	21' 1"e	26' 8"e	21' 10"e	16' 1"e	27' 7"e	25' 1"e	21' 1"e	26' 8"e	21' 10"e	16' 1"e
1400S250-68	50	33' 2"	30' 2"	25' 0"e	35' 4"	30' 0"	23' 6"	30' 2"	27' 4"	23' 10"	33' 10"	30' 0"	23' 6"
1400S250-97	50	37' 8"	34' 2"	29' 10"	42' 3"	38' 4"	32' 6"	34' 2"	31' 1"	27' 2"	38' 4"	34' 10"	30' 6"
1400S250-118	50	40' 2"	36' 7"	31' 10"	45' 2"	41' 0"	35' 10"	36' 7"	33' 2"	29' 0"	41' 0"	37' 3"	32' 7"
1400S300-54	50	30' 6"e	26' 4"e	21' 7"e	26' 10"e	22' 0"e	16' 2"e	28' 1"e	25' 7"e	21' 7"e	26' 10"e	22' 0"e	16' 2"e
1400S300-68	50	34' 1"	31' 0"	25' 7"e	35' 9"	30' 4"	23' 9"	31' 0"	28' 2"	24' 7"e	34' 9"	30' 4"	23' 9"
1400S300-97	50	38' 10"	35' 4"	30' 10"	43' 8"	39' 8"	33' 2"	35' 4"	32' 1"	28' 1"	39' 8"	36' 1"	31' 6"
1400S300-118	50	41' 6"	37' 9"	33' 0"	46' 7"	42' 4"	37' 0"	37' 9"	34' 3"	30' 0"	42' 4"	38' 6"	33' 7"
1400S350-54	50	33' 0"e	29' 8"e	23' 6"e	28' 10"e	23' 4"e	16' 10"e	30' 0"e	27' 3"e	23' 6"e	28' 10"e	23' 4"e	16' 10"e
1400S350-68	50	36' 7"	33' 2"	28' 7"e	40' 0"	33' 8"	26' 1"	33' 2"	30' 2"	26' 4"e	37' 3"	33' 8"	26' 1"
1400S350-97	50	40' 10"	37' 1"	32' 4"	45' 10"	41' 8"	36' 4"	37' 1"	33' 8"	29' 6"	41' 8"	37' 10"	33' 1"
1400S350-118	50	43' 6"	39' 6"	34' 6"	48' 9"	44' 3"	38' 8"	39' 6"	35' 10"	31' 3"	44' 3"	40' 3"	35' 2"
1600S162-68	50	33' 0"e	28' 7"e	23' 4"e	33' 0"e	28' 7"e	22' 9"e	30' 10"e	28' 1"e	23' 4"e	33' 0"e	28' 7"e	22' 9"e
1600S162-97	50	38' 10"	35' 3"	30' 10"	43' 7"	37' 9"	30' 10"	35' 3"	32' 1"	28' 0"	39' 8"	36' 0"	30' 10"
1600S162-118	50	41' 9"	37' 10"	33' 1"	46' 10"	42' 7"	35' 10"	37' 10"	34' 6"	30' 1"	42' 7"	38' 8"	33' 9"
1600S200-68	50	35' 4"e	31' 0"e	25' 3"e	35' 9"e	30' 9"e	23' 8"e	32' 2"e	29' 2"e	25' 3"e	35' 9"e	30' 9"e	23' 8"e
1600S200-97	50	40' 4"	36' 8"	32' 0"	45' 3"	40' 7"	33' 2"	36' 8"	33' 3"	29' 1"	41' 2"	37' 4"	32' 8"
1600S200-118	50	43' 3"	39' 3"	34' 4"	48' 7"	44' 2"	38' 6"	39' 3"	35' 9"	31' 2"	44' 2"	40' 1"	35' 1"
1600S250-68	50	36' 8"e	32' 4"e	26' 4"e	36' 9"e	30' 10"e	23' 9"e	33' 3"e	30' 3"e	26' 4"e	36' 9"e	30' 10"e	23' 9"e
1600S250-97	50	41' 9"	37' 10"	33' 1"	46' 10"	42' 3"	34' 6"	37' 10"	34' 6"	30' 1"	42' 7"	38' 8"	33' 9"
1600S250-118	50	44' 9"	40' 8"	35' 6"	50' 3"	45' 8"	39' 10"	40' 8"	37' 0"	32' 3"	45' 8"	41' 6"	36' 2"
1600S300-68	50	37' 6"e	33' 3"e	27' 2"e	37' 2"e	31' 3"e	24' 0"e	34' 1"e	31' 0"e	27' 1"e	37' 2"e	31' 3"e	24' 0"e
1600S300-97	50	43' 0"	39' 1"	34' 1"	48' 3"	43' 4"	35' 4"	39' 1"	35' 6"	31' 0"	43' 10"	39' 10"	34' 9"
1600S300-118	50	46' 2"	42' 0"	36' 8"	51' 10"	47' 1"	41' 1"	42' 0"	38' 1"	33' 3"	47' 1"	42' 9"	37' 4"
1600S350-68	50	39' 7"e	36' 0"e	30' 4"e	40' 4"e	33' 8"e	25' 7"e	36' 0"e	32' 8"e	28' 7"e	40' 4"e	33' 8"e	25' 7"e
1600S350-97	50	45' 0"	40' 10"	35' 9"	50' 7"	45' 10"	39' 1"	40' 10"	37' 2"	32' 6"	45' 10"	41' 8"	36' 6"
1600S350-118	50	48' 3"	43' 9"	38' 3"	54' 2"	49' 2"	43' 0"	43' 9"	39' 9"	34' 9"	49' 2"	44' 8"	39' 1"

NOTE: See page 43 for Table Notes.

FLOOR JOIST SPANS

10 psf Dead Load and 50 psf Live Load

MEMBER	F_y (ksi)	LIVE LOAD DEFLECTION L/360						LIVE LOAD DEFLECTION L/480					
		SINGLE SPAN			TWO EQUAL SPANS			SINGLE SPAN			TWO EQUAL SPANS		
		JOIST SPACING (in.) o.c.			JOIST SPACING (in.) o.c.			JOIST SPACING (in.) o.c.			JOIST SPACING (in.) o.c.		
		12	16	24	12	16	24	12	16	24	12	16	24
600S137-33	33	9' 6"e	8' 3"e	6' 8"e	9' 2"	7' 8"	6' 0"e	9' 6"e	8' 3"e	6' 8"e	9' 2"	7' 8"	6' 0"e
600S137-43	33	11' 6"	9' 10"	8' 1"e	11' 6"	9' 10"	7' 10"	11' 0"	9' 10"	8' 1"e	11' 6"	9' 10"	7' 10"
600S137-43 (50)	50	12' 1"	11' 0"	9' 3"	13' 1"	11' 3"	9' 0"	11' 0"	10' 0"	8' 8"	12' 3"	11' 2"	9' 0"
600S137-54	50	13' 0"	11' 9"	10' 3"	14' 7"	13' 3"	10' 9"	11' 9"	10' 8"	9' 4"	13' 3"	12' 1"	10' 6"
600S137-68	50	13' 10"	12' 8"	11' 1"	15' 7"	14' 2"	12' 4"	12' 8"	11' 6"	10' 0"	14' 2"	12' 10"	11' 3"
600S137-97	50	15' 4"	14' 0"	12' 2"	17' 3"	15' 8"	13' 8"	14' 0"	12' 8"	11' 1"	15' 8"	14' 3"	12' 6"
600S162-33	33	10' 3"e	8' 10"e	7' 3"e	10' 1"	8' 4"e	6' 4"e	10' 3"e	8' 10"e	7' 3"e	10' 1"	8' 4"e	6' 4"e
600S162-43	33	12' 7"	11' 0"e	9' 0"e	12' 8"	11' 0"	8' 9"	11' 6"	10' 4"e	9' 0"e	12' 8"	11' 0"	8' 9"
600S162-43 (50)	50	12' 7"	11' 6"	10' 0"	14' 1"	12' 2"	9' 8"	11' 6"	10' 4"	9' 1"	12' 10"	11' 8"	9' 8"
600S162-54	50	13' 7"	12' 3"	10' 9"	15' 2"	13' 9"	12' 0"	12' 3"	11' 2"	9' 9"	13' 9"	12' 7"	11' 0"
600S162-68	50	14' 7"	13' 2"	11' 6"	16' 3"	14' 9"	13' 0"	13' 2"	12' 0"	10' 6"	14' 9"	13' 6"	11' 9"
600S162-97	50	16' 1"	14' 8"	12' 9"	18' 1"	16' 4"	14' 4"	14' 8"	13' 3"	11' 7"	16' 4"	14' 10"	13' 1"
600S162-118	50	17' 0"	15' 6"	13' 6"	19' 1"	17' 4"	15' 2"	15' 6"	14' 1"	12' 3"	17' 4"	15' 9"	13' 9"
600S200-33	33	10' 10"e	9' 6"e	7' 8"e	10' 4"	8' 8"e	6' 7"e	10' 10"e	9' 6"e	7' 8"e	10' 4"	8' 8"e	6' 7"e
600S200-43	33	13' 1"	11' 3"e	9' 2"e	13' 1"	11' 3"	9' 0"e	12' 1"	11' 0"e	9' 2"e	13' 1"	11' 3"	9' 0"e
600S200-43 (50)	50	13' 3"	12' 1"	10' 6"e	14' 10"	13' 0"	10' 3"	12' 1"	11' 0"	9' 7"	13' 6"	12' 3"	10' 3"
600S200-54	50	14' 3"	13' 0"	11' 3"	16' 0"	14' 6"	12' 2"	13' 0"	11' 9"	10' 3"	14' 6"	13' 2"	11' 6"
600S200-68	50	15' 3"	13' 10"	12' 1"	17' 2"	15' 7"	13' 7"	13' 10"	12' 7"	11' 0"	15' 7"	14' 2"	12' 4"
600S200-97	50	17' 0"	15' 4"	13' 6"	19' 1"	17' 3"	15' 1"	15' 4"	14' 0"	12' 3"	17' 3"	15' 8"	13' 9"
600S200-118	50	18' 0"	16' 3"	14' 3"	20' 2"	18' 3"	16' 0"	16' 3"	14' 9"	13' 0"	18' 3"	16' 8"	14' 6"
600S250-43	33	13' 4"e	11' 7"e	9' 6"e	13' 4"	11' 7"	9' 2"e	12' 7"	11' 6"e	9' 6"e	13' 4"	11' 7"	9' 2"e
600S250-43 (50)	50	13' 8"	12' 6"	10' 9"e	15' 3"	13' 2"	10' 3"	12' 6"	11' 3"	9' 10"	14' 0"	12' 8"	10' 3"
600S250-54	50	14' 10"	13' 6"	11' 9"	16' 8"	15' 2"	12' 6"	13' 6"	12' 3"	10' 8"	15' 2"	13' 9"	12' 0"
600S250-68	50	16' 0"	14' 7"	12' 8"	18' 0"	16' 4"	14' 3"	14' 7"	13' 2"	11' 7"	16' 4"	14' 10"	13' 0"
600S250-97	50	17' 9"	16' 2"	14' 2"	20' 0"	18' 2"	15' 10"	16' 2"	14' 8"	12' 10"	18' 2"	16' 6"	14' 4"
600S250-118	50	18' 10"	17' 2"	15' 0"	21' 2"	19' 3"	16' 9"	17' 2"	15' 7"	13' 7"	19' 3"	17' 6"	15' 3"
600S250-118	50	15' 2"	13' 9"	12' 1"	17' 1"	15' 6"	12' 8"	13' 9"	12' 6"	11' 0"	15' 6"	14' 1"	12' 3"
600S300-68	50	16' 7"	15' 0"	13' 1"	18' 7"	16' 10"	14' 9"	15' 0"	13' 8"	11' 10"	16' 10"	15' 3"	13' 4"
600S300-97	50	18' 7"	16' 10"	14' 8"	20' 9"	18' 10"	16' 6"	16' 10"	15' 3"	13' 4"	18' 10"	17' 2"	15' 0"
600S300-118	50	19' 8"	17' 10"	15' 8"	22' 1"	20' 1"	17' 7"	17' 10"	16' 3"	14' 2"	20' 1"	18' 3"	16' 0"
800S137-33	33	10' 10"e	9' 4"e	7' 8"e	9' 6"e	7' 8"e	5' 7"e	10' 10"e	9' 4"e	7' 8"e	9' 6"e	7' 8"e	5' 7"e
800S137-43	33	13' 2"e	11' 6"e	9' 4"e	13' 2"	11' 2"	8' 9"e	13' 2"e	11' 6"e	9' 4"e	13' 2"	11' 2"	8' 9"e
800S137-43 (50)	50	15' 1"	13' 0"	10' 8"e	15' 0"	12' 7"	9' 8"	13' 8"	12' 4"	10' 8"e	15' 0"	12' 7"	9' 8"
800S137-54	50	16' 3"	14' 9"	12' 7"	17' 9"	15' 4"	12' 7"	14' 9"	13' 6"	11' 9"	16' 8"	15' 1"	12' 7"
800S137-68	50	17' 8"	16' 0"	14' 0"	19' 9"	18' 0"	14' 9"	16' 0"	14' 7"	12' 8"	18' 0"	16' 4"	14' 3"
800S137-97	50	19' 7"	17' 9"	15' 6"	22' 0"	20' 0"	17' 6"	17' 9"	16' 2"	14' 1"	20' 0"	18' 1"	15' 10"
800S162-33	33	11' 9"e	10' 3"e	7' 10"e	9' 10"e	8' 0"e	5' 8"e	11' 9"e	10' 3"e	7' 10"e	9' 10"e	8' 0"e	5' 8"e
800S162-43	33	14' 3"e	12' 4"e	10' 1"e	13' 10"	11' 9"	9' 2"e	14' 3"e	12' 4"e	10' 1"e	13' 10"	11' 9"	9' 2"e
800S162-43 (50)	50	15' 8"	14' 1"	11' 6"e	15' 6"	13' 0"	10' 0"	14' 2"	12' 10"	11' 3"e	15' 6"	13' 0"	10' 0"
800S162-54	50	17' 0"	15' 4"	13' 6"	19' 1"	16' 6"	13' 4"	15' 4"	14' 0"	12' 3"	17' 3"	15' 8"	13' 4"
800S162-68	50	18' 4"	16' 8"	14' 7"	20' 7"	18' 8"	15' 9"	16' 8"	15' 2"	13' 2"	18' 8"	17' 0"	14' 10"
800S162-97	50	20' 4"	18' 6"	16' 2"	22' 10"	20' 9"	18' 2"	18' 6"	16' 9"	14' 8"	20' 9"	18' 10"	16' 6"
800S162-118	50	21' 7"	19' 7"	17' 1"	24' 2"	22' 0"	19' 2"	19' 7"	17' 9"	15' 7"	22' 0"	20' 0"	17' 6"
800S200-43	33	15' 3"e	13' 2"e	10' 9"e	15' 3"	12' 10"e	10' 0"e	15' 1"e	13' 2"e	10' 9"e	15' 3"	12' 10"e	10' 0"e
800S200-43 (50)	50	16' 8"	15' 1"e	12' 3"e	16' 9"	14' 1"	10' 8"	15' 1"	13' 9"	12' 0"e	16' 9"	14' 1"	10' 8"
800S200-54	50	17' 10"	16' 3"	14' 2"	20' 1"	17' 7"	14' 4"	16' 3"	14' 9"	12' 10"	18' 3"	16' 7"	14' 4"
800S200-68	50	19' 2"	17' 6"	15' 3"	21' 7"	19' 7"	17' 1"	17' 6"	15' 10"	13' 10"	19' 7"	17' 9"	15' 7"
800S200-97	50	21' 4"	19' 4"	17' 0"	24' 0"	21' 9"	19' 1"	19' 4"	17' 8"	15' 4"	21' 9"	19' 9"	17' 3"
800S200-118	50	22' 8"	20' 7"	18' 0"	25' 4"	23' 1"	20' 2"	20' 7"	18' 8"	16' 3"	23' 1"	21' 0"	18' 3"
800S250-43	33	15' 8"e	13' 7"e	11' 1"e	15' 6"	13' 0"e	10' 0"e	15' 8"e	13' 7"e	11' 1"e	15' 6"	13' 0"e	10' 0"e
800S250-43 (50)	50	17' 2"	15' 4"e	12' 7"e	16' 10"	14' 1"	10' 8"	15' 7"	14' 2"	12' 4"e	16' 10"	14' 1"	10' 8"
800S250-54	50	18' 7"	16' 10"	14' 8"e	20' 10"	18' 1"	14' 8"	16' 10"	15' 3"	13' 4"	19' 0"	17' 2"	14' 8"
800S250-68	50	20' 1"	18' 2"	15' 10"	22' 6"	20' 6"	17' 3"	18' 2"	16' 7"	14' 6"	20' 6"	18' 7"	16' 3"
800S250-97	50	22' 4"	20' 3"	17' 8"	25' 1"	22' 9"	19' 10"	20' 3"	18' 6"	16' 1"	22' 9"	20' 8"	18' 1"
800S250-118	50	23' 8"	21' 6"	18' 9"	26' 7"	24' 2"	21' 1"	21' 6"	19' 7"	17' 1"	24' 2"	22' 0"	19' 2"
800S300-54	50	19' 0"	17' 2"	15' 0"e	21' 1"	18' 3"	14' 8"	17' 2"	15' 8"	13' 8"	19' 3"	17' 7"	14' 8"
800S300-68	50	20' 8"	18' 9"	16' 4"	23' 2"	21' 1"	17' 7"	18' 9"	17' 1"	14' 10"	21' 1"	19' 1"	16' 8"
800S300-97	50	23' 2"	21' 1"	18' 4"	26' 0"	23' 7"	20' 8"	21' 1"	19' 1"	16' 8"	23' 7"	21' 6"	18' 9"
800S300-118	50	24' 8"	22' 4"	19' 7"	27' 8"	25' 2"	22' 0"	22' 4"	20' 4"	17' 9"	25' 2"	22' 10"	20' 0"
1000S162-33	33	12' 7"e	9' 4"e	6' 3"e	9' 1"e	7' 1"e	4' 10"e	12' 7"e	9' 4"e	6' 3"e	9' 1"e	7' 1"e	4' 10"e
1000S162-43	33	15' 9"e	13' 8"e	11' 2"e	14' 8"e	12' 1"e	9' 1"e	15' 9"e	13' 8"e	11' 2"e	14' 8"e	12' 1"e	9' 1"e
1000S162-43 (50)	50	17' 10"e	15' 6"e	12' 8"e	16' 0"e	13' 1"e	9' 7"e	16' 10"e	15' 3"e	12' 8"e	16' 0"e	13' 1"e	9' 7"e
1000S162-54	50	20' 2"	18' 3"	15' 0"e	21' 2"	18' 1"	14' 2"	18' 3"	16' 8"	14' 7"e	20' 7"	18' 1"	14' 2"
1000S162-68	50	21' 10"	19' 10"	17' 4"	24' 7"	21' 8"	17' 8"	19' 10"	18' 1"	15' 9"	22' 3"	20' 3"	17' 8"
1000S162-97	50	24' 7"	22' 3"	19' 6"	27' 7"	25' 1"	21' 10"	22' 3"	20' 3"	17' 8"	25' 1"	22' 9"	19' 10"
1000S162-118	50	26' 0"	23' 7"	20' 8"	29' 2"	26' 6"	23' 2"	23' 7"	21' 6"	18' 9"	26' 6"	24' 1"	21' 1"
1000S200-43	33	17' 0"e	14' 9"e	12' 1"e	15' 3"e	12' 7"e	9' 4"e	17' 0"e	14' 9"e	12' 1"e	15' 3"e	12' 7"e	9' 4"e
1000S200-43 (50)	50	19' 4"e	16' 9"e	13' 8"e	16' 8"e	13' 7"e	9' 10"e	17' 8"e	16' 0"e	13' 8"e	16' 8"e	13' 7"e	9' 10"e
1000S200-54	50	21' 1"	19' 2"	16' 1"e	22' 2"	18' 8"	14' 7"	19' 2"	17' 4"	15' 2"e	21' 6"	18' 8"	14' 7"
1000S200-68	50	22' 10"	20' 9"	18' 2"	25' 8"	23' 2"	18' 10"	20' 9"	18' 10"	16' 6"	23' 3"	21' 2"	18' 6"
1000S200-97	50	25' 8"	23' 3"	20' 4"	28' 9"	26' 2"	22' 10"	23' 3"	21' 2"	18' 6"	26' 2"	23' 9"	20' 9"
1000S200-118	50	27' 2"	24' 8"	21' 7"	30' 6"	27' 9"	24' 2"	24' 8"	22' 6"	19' 7"	27' 9"	25' 2"	22' 0"

NOTE: See page 43 for Table Notes.

For more information, please contact Marino\WARE® Technical Services at 866.545.1545
This technical information reflects the most current information available and supersedes any and all
previous publications effective February 17, 2023 | MW-Cold Formed Catalog | © WARE Industries, Inc., 2023

10 psf Dead Load and 50 psf Live Load

MEMBER	F_y (ksi)	LIVE LOAD DEFLECTION L/360						LIVE LOAD DEFLECTION L/480					
		SINGLE SPAN			Two Equal Spans			SINGLE SPAN			TWO EQUAL SPANS		
		JOIST SPACING (in.) o.c.			JOIST SPACING (in.) o.c.			JOIST SPACING (in.) o.c.			JOIST SPACING (in.) o.c.		
		12	16	24	12	16	24	12	16	24	12	16	24
1000S250-43	33	17' 6"e	15' 2"e	12' 4"e	15' 9"e	13' 0"e	9' 7"e	17' 6"e	15' 2"e	12' 4"e	15' 9"e	13' 0"e	9' 7"e
1000S250-43 (50)	50	19' 10"e	17' 2"e	13' 10"e	17' 0"e	13' 9"e	10' 0"e	18' 4"e	16' 8"e	13' 10"e	17' 0"e	13' 9"e	10' 0"e
1000S250-54	50	22' 2"	20' 2"	16' 6"e	23' 1"	19' 6"	15' 1"	20' 2"	18' 3"	16' 0"e	22' 7"	19' 6"	15' 1"
1000S250-68	50	24' 0"	21' 9"	19' 0"	26' 10"	23' 9"	19' 6"	21' 9"	19' 9"	17' 3"	24' 4"	22' 2"	19' 4"
1000S250-97	50	26' 8"	24' 3"	21' 2"	30' 0"	27' 3"	23' 9"	24' 3"	22' 1"	19' 3"	27' 3"	24' 9"	21' 7"
1000S250-118	50	28' 4"	25' 9"	22' 6"	31' 9"	28' 10"	25' 3"	25' 9"	23' 4"	20' 4"	28' 10"	26' 3"	23' 0"
1000S300-54	50	22' 7"	20' 6"	16' 9"e	23' 2"	19' 7"	15' 2"	20' 6"	18' 7"	16' 3"e	23' 0"	19' 7"	15' 2"
1000S300-68	50	24' 7"	22' 3"	19' 6"	27' 7"	24' 2"	19' 9"	22' 3"	20' 3"	17' 8"	25' 1"	22' 9"	19' 9"
1000S300-97	50	27' 7"	25' 1"	21' 10"	31' 0"	28' 2"	24' 7"	25' 1"	22' 9"	19' 10"	28' 2"	25' 7"	22' 4"
1000S300-118	50	29' 4"	26' 8"	23' 3"	33' 0"	30' 0"	26' 2"	26' 8"	24' 3"	21' 2"	30' 0"	27' 3"	23' 9"
1000S350-54	50	23' 9"	21' 8"e	18' 8"e	25' 2"	21' 2"	16' 2"	21' 8"	19' 8"	17' 2"e	24' 3"	21' 2"	16' 2"
1000S350-68	50	26' 0"	23' 7"	20' 7"	29' 2"	26' 6"	21' 10"	23' 7"	21' 6"	18' 9"	26' 6"	24' 1"	21' 1"
1000S350-97	50	29' 1"	26' 4"	23' 1"	32' 7"	29' 8"	25' 10"	26' 4"	24' 0"	21' 0"	29' 8"	26' 10"	23' 6"
1000S350-118	50	30' 10"	28' 1"	24' 6"	34' 8"	31' 6"	27' 6"	28' 1"	25' 6"	22' 3"	31' 6"	28' 7"	25' 0"
1200S162-43	33	17' 0"e	14' 8"e	11' 7"e	14' 7"e	11' 9"e	8' 4"e	17' 0"e	14' 8"e	11' 7"e	14' 7"e	11' 9"e	8' 4"e
1200S162-43 (50)	50	19' 2"e	16' 7"e	11' 7"e	15' 6"e	12' 3"e	8' 8"e	19' 2"e	16' 7"e	11' 7"e	15' 6"e	12' 3"e	8' 8"e
1200S162-54	50	22' 9"e	19' 8"e	16' 1"e	22' 4"e	18' 8"e	14' 2"e	21' 1"e	19' 2"e	16' 1"e	22' 4"e	18' 8"e	14' 2"e
1200S162-68	50	25' 3"	23' 0"	19' 2"	27' 1"	23' 6"	19' 2"	23' 0"	20' 10"	18' 2"	25' 9"	23' 4"	19' 2"
1200S162-97	50	28' 7"	26' 0"	22' 8"	32' 1"	29' 2"	24' 10"	26' 0"	23' 7"	20' 7"	29' 2"	26' 6"	23' 2"
1200S162-118	50	30' 4"	27' 7"	24' 1"	34' 1"	31' 0"	27' 1"	27' 7"	25' 1"	21' 10"	31' 0"	28' 2"	24' 7"
1200S200-54	50	24' 2"e	21' 4"e	17' 4"e	23' 1"e	19' 2"e	14' 6"e	22' 0"e	20' 0"e	17' 4"e	23' 1"e	19' 2"e	14' 6"e
1200S200-68	50	26' 3"	23' 10"	20' 7"e	29' 2"	25' 3"	20' 3"	23' 10"	21' 8"	19' 0"	26' 10"	24' 4"	20' 3"
1200S200-97	50	29' 9"	27' 1"	23' 8"	33' 6"	30' 4"	26' 7"	27' 1"	24' 7"	21' 6"	30' 4"	27' 7"	24' 1"
1200S200-118	50	31' 8"	28' 9"	25' 1"	35' 7"	32' 3"	28' 2"	28' 9"	26' 1"	22' 9"	32' 3"	29' 3"	25' 7"
1200S250-54	50	25' 3"e	22' 1"e	18' 0"e	23' 6"e	19' 6"e	14' 8"e	22' 10"e	20' 9"e	18' 0"e	23' 6"e	19' 6"e	14' 8"e
1200S250-68	50	27' 4"	24' 10"	21' 3"e	30' 1"	25' 9"	20' 4"	24' 10"	22' 8"	19' 9"	28' 0"	25' 4"	20' 4"
1200S250-97	50	31' 0"	28' 1"	24' 7"	34' 9"	31' 7"	27' 4"	28' 1"	25' 7"	22' 3"	31' 7"	28' 8"	25' 1"
1200S250-118	50	32' 10"	29' 10"	26' 1"	36' 10"	33' 6"	29' 3"	29' 10"	27' 2"	23' 8"	33' 6"	30' 6"	26' 7"
1200S300-54	50	26' 0"e	22' 6"e	18' 4"e	23' 10"e	19' 9"e	14' 10"e	23' 8"e	21' 7"e	18' 4"e	23' 10"e	19' 9"e	14' 10"e
1200S300-68	50	28' 6"	25' 10"	21' 8"e	30' 8"	26' 7"	21' 2"	25' 10"	23' 6"	20' 7"	29' 1"	26' 4"	21' 2"
1200S300-97	50	32' 0"	29' 1"	25' 4"	36' 0"	32' 8"	28' 0"	29' 1"	26' 4"	23' 1"	32' 8"	29' 8"	25' 10"
1200S300-118	50	34' 0"	30' 10"	27' 0"	38' 2"	34' 8"	30' 3"	30' 10"	28' 1"	24' 6"	34' 8"	31' 6"	27' 7"
1200S350-54	50	27' 6"e	25' 0"e	20' 6"e	25' 8"e	21' 1"e	15' 7"e	25' 0"e	22' 8"e	19' 9"e	25' 8"e	21' 1"e	15' 7"e
1200S350-68	50	30' 0"	27' 3"	23' 9"e	33' 8"	29' 3"	23' 0"	27' 3"	24' 9"	21' 8"e	30' 7"	27' 9"	23' 0"
1200S350-97	50	33' 7"	30' 6"	26' 7"	37' 8"	34' 2"	29' 10"	30' 6"	27' 8"	24' 2"	34' 2"	31' 1"	27' 2"
1200S350-118	50	35' 8"	32' 4"	28' 3"	40' 1"	36' 4"	31' 9"	32' 4"	29' 6"	25' 8"	36' 4"	33' 1"	28' 10"
1400S162-54	50	24' 1"e	20' 9"e	17' 0"e	22' 8"e	18' 7"e	13' 7"e	23' 8"e	20' 9"e	17' 0"e	22' 8"e	18' 7"e	13' 7"e
1400S162-68	50	28' 6"	24' 10"	20' 4"e	28' 9"	24' 10"	20' 1"	25' 10"	23' 6"	20' 4"e	28' 9"	24' 10"	20' 1"
1400S162-97	50	32' 4"	29' 6"	25' 8"	36' 4"	32' 8"	26' 8"	29' 6"	26' 9"	23' 4"	33' 1"	30' 1"	26' 3"
1400S162-118	50	34' 8"	31' 7"	27' 7"	39' 0"	35' 4"	30' 10"	31' 7"	28' 8"	25' 0"	35' 4"	32' 2"	28' 1"
1400S200-54	50	26' 2"e	22' 8"e	18' 6"e	23' 3"e	19' 0"e	13' 9"e	24' 8"e	22' 6"e	18' 6"e	23' 3"e	19' 0"e	13' 9"e
1400S200-68	50	29' 8"	26' 10"	22' 0"e	31' 1"	26' 9"	20' 10"	26' 10"	24' 6"	21' 4"e	30' 2"	26' 9"	20' 10"
1400S200-97	50	33' 8"	30' 7"	26' 8"	37' 9"	34' 4"	28' 7"	30' 7"	27' 9"	24' 3"	34' 4"	31' 2"	27' 3"
1400S200-118	50	36' 1"	32' 9"	28' 7"	40' 6"	36' 9"	32' 1"	32' 9"	29' 9"	26' 0"	36' 9"	33' 4"	29' 2"
1400S250-54	50	27' 2"e	23' 7"e	19' 2"e	23' 7"e	19' 1"e	13' 10"e	25' 7"e	23' 3"e	19' 2"e	23' 7"e	19' 1"e	13' 10"e
1400S250-68	50	30' 9"	28' 0"	22' 9"e	31' 10"	27' 0"	21' 0"	28' 0"	25' 6"	22' 2"e	31' 4"	27' 0"	21' 0"
1400S250-97	50	35' 0"	31' 9"	27' 9"	39' 3"	35' 8"	29' 7"	31' 9"	28' 10"	25' 2"	35' 8"	32' 4"	28' 3"
1400S250-118	50	37' 4"	33' 10"	29' 8"	41' 10"	38' 1"	33' 3"	33' 10"	30' 9"	26' 10"	38' 1"	34' 7"	30' 2"
1400S300-54	50	27' 10"e	24' 1"e	19' 7"e	23' 8"e	19' 2"e	14' 0"e	26' 1"e	23' 8"e	19' 7"e	23' 8"e	19' 2"e	14' 0"e
1400S300-68	50	31' 8"	28' 7"	23' 4"e	32' 3"	27' 3"	21' 2"	28' 9"	26' 1"	22' 9"e	32' 3"	27' 3"	21' 2"
1400S300-97	50	36' 1"	32' 9"	28' 8"	40' 7"	36' 10"	30' 3"	32' 9"	29' 9"	26' 1"	36' 10"	33' 6"	29' 3"
1400S300-118	50	38' 7"	35' 0"	30' 7"	43' 3"	39' 3"	34' 4"	35' 0"	31' 9"	27' 9"	39' 3"	35' 8"	31' 2"
1400S350-54	50	30' 8"e	27' 1"e	19' 7"e	25' 3"e	20' 3"e	14' 6"e	27' 10"e	25' 3"e	19' 7"e	25' 3"e	20' 3"e	14' 6"e
1400S350-68	50	33' 10"	30' 9"e	26' 1"e	35' 10"	30' 1"	23' 1"	30' 9"	28' 0"	24' 6"e	34' 7"	30' 1"	23' 1"
1400S350-97	50	37' 10"	34' 6"	30' 1"	42' 7"	38' 8"	33' 4"	34' 6"	31' 3"	27' 4"	38' 8"	35' 2"	30' 8"
1400S350-118	50	40' 4"	36' 8"	32' 0"	45' 3"	41' 2"	36' 0"	36' 8"	33' 3"	29' 1"	41' 2"	37' 4"	32' 8"
1600S162-68	50	30' 2"e	26' 1"e	21' 3"e	30' 2"e	26' 1"e	20' 2"e	28' 8"e	26' 1"e	21' 3"e	30' 2"e	26' 1"e	20' 2"e
1600S162-97	50	36' 1"	32' 9"	28' 2"	39' 9"	34' 6"	28' 2"	32' 9"	29' 9"	26' 0"	36' 9"	33' 4"	28' 2"
1600S162-118	50	38' 9"	35' 2"	30' 9"	43' 6"	39' 6"	32' 9"	35' 2"	32' 0"	28' 0"	39' 6"	35' 10"	31' 4"
1600S200-68	50	32' 8"e	28' 3"e	23' 1"e	32' 8"e	27' 4"e	20' 10"e	29' 10"e	27' 1"e	23' 1"e	32' 8"e	27' 4"e	20' 10"e
1600S200-97	50	37' 6"	34' 0"	29' 8"	42' 1"	37' 1"	30' 3"	34' 0"	30' 10"	27' 0"	38' 2"	34' 8"	30' 3"
1600S200-118	50	40' 2"	36' 6"	31' 10"	45' 1"	41' 0"	35' 1"	36' 6"	33' 2"	29' 0"	41' 0"	37' 3"	32' 6"
1600S250-68	50	34' 1"e	29' 6"e	24' 1"e	33' 0"e	27' 7"e	21' 0"e	30' 10"e	28' 1"e	24' 1"e	33' 0"e	27' 7"e	21' 0"e
1600S250-97	50	38' 9"	35' 2"	30' 9"	43' 6"	38' 7"	31' 6"	35' 2"	32' 0"	27' 10"	39' 6"	35' 10"	31' 4"
1600S250-118	50	41' 7"	37' 9"	33' 0"	46' 8"	42' 4"	36' 6"	37' 9"	34' 3"	30' 0"	42' 4"	38' 6"	33' 8"
1600S300-68	50	34' 10"e	30' 4"e	24' 9"e	33' 4"e	27' 9"e	21' 2"e	31' 8"e	28' 9"e	24' 9"e	33' 4"e	27' 9"e	21' 2"e
1600S300-97	50	39' 10"	36' 3"	31' 8"	44' 9"	39' 7"	32' 3"	36' 3"	33' 0"	28' 9"	40' 8"	37' 0"	32' 3"
1600S300-118	50	42' 10"	39' 0"	34' 0"	48' 1"	43' 8"	37' 6"	39' 0"	35' 4"	30' 10"	43' 8"	39' 8"	34' 8"
1600S350-68	50	36' 9"e	33' 4"e	27' 9"e	36' 1"e	29' 10"e	22' 4"e	33' 4"e	30' 3"e	26' 6"e	36' 1"e	29' 10"e	22' 4"e
1600S350-97	50	41' 9"	38' 0"	33' 2"	46' 10"	42' 7"	35' 4"	38' 0"	34' 6"	30' 2"	42' 7"	38' 8"	33' 9"
1600S350-118	50	44' 9"	40' 8"	35' 7"	50' 3"	45' 8"	39' 10"	40' 8"	37' 0"	32' 3"	45' 8"	41' 6"	36' 3"

NOTE: See page 43 for Table Notes.

FLOOR JOIST SPANS

15 psf Dead Load and 125 psf Live Load

MEMBER	F_y (ksi)	LIVE LOAD DEFLECTION L/360						LIVE LOAD DEFLECTION L/480					
		SINGLE SPAN			TWO EQUAL SPANS			SINGLE SPAN			TWO EQUAL SPANS		
		JOIST SPACING (in.) o.c.			JOIST SPACING (in.) o.c.			JOIST SPACING (in.) o.c.			JOIST SPACING (in.) o.c.		
		12	16	24	12	16	24	12	16	24	12	16	24
600S137-33	33	6' 2"e	5' 4"e	4' 4"e	5' 4"e	4' 4"e	3' 2"e	6' 2"e	5' 4"e	4' 4"e	5' 4"e	4' 4"e	3' 2"e
600S137-43	33	7' 6"e	6' 6"e	5' 3"e	7' 2"	6' 1"e	4' 8"e	7' 6"e	6' 6"e	5' 3"e	7' 2"	6' 1"e	4' 8"e
600S137-43 (50)	50	8' 7"	7' 4"e	6' 1"e	8' 2"	6' 10"	5' 3"	8' 1"	7' 3"e	6' 1"e	8' 2"	6' 10"	5' 3"
600S137-54	50	9' 7"	8' 8"	7' 1"e	10' 0"	8' 6"	6' 8"	8' 8"	7' 10"	6' 10"e	9' 9"	8' 6"	6' 8"
600S137-68	50	10' 3"	9' 3"	8' 1"	11' 6"	10' 0"	8' 0"	9' 3"	8' 6"	7' 4"	10' 6"	9' 6"	8' 0"
600S137-97	50	11' 4"	10' 3"	9' 0"	12' 8"	11' 7"	10' 1"	10' 3"	9' 4"	8' 2"	11' 7"	10' 6"	9' 2"
600S162-33	33	6' 8"e	5' 9"e	4' 7"e	5' 9"e	4' 7"e	3' 3"e	6' 8"e	5' 9"e	4' 7"e	5' 9"e	4' 7"e	3' 3"e
600S162-43	33	8' 3"e	7' 2"e	5' 10"e	8' 1"e	6' 9"e	5' 2"e	8' 3"e	7' 2"e	5' 10"e	8' 1"e	6' 9"e	5' 2"e
600S162-43 (50)	50	9' 2"e	8' 0"e	6' 6"e	8' 10"	7' 4"	5' 7"	8' 6"	7' 8"e	6' 6"e	8' 10"	7' 4"	5' 7"
600S162-54	50	10' 0"	9' 1"	7' 10"e	11' 1"	9' 4"	7' 4"	9' 1"	8' 3"	7' 2"e	10' 2"	9' 3"	7' 4"
600S162-68	50	10' 8"	9' 8"	8' 6"	12' 0"	10' 10"	8' 10"	9' 8"	8' 10"	7' 8"	10' 10"	9' 10"	8' 8"
600S162-97	50	11' 10"	10' 9"	9' 4"	13' 3"	12' 1"	10' 7"	10' 9"	9' 9"	8' 7"	12' 1"	11' 0"	9' 7"
600S162-118	50	12' 6"	11' 4"	10' 0"	14' 1"	12' 9"	11' 2"	11' 4"	10' 4"	9' 0"	12' 9"	11' 7"	10' 2"
600S200-33	33	7' 2"e	6' 2"e	4' 7"e	5' 10"e	4' 8"e	3' 4"e	7' 2"e	6' 2"e	4' 7"e	5' 10"e	4' 8"e	3' 4"e
600S200-43	33	8' 7"e	7' 4"e	6' 1"e	8' 2"e	6' 10"e	5' 3"e	8' 7"e	7' 4"e	6' 1"e	8' 2"e	6' 10"e	5' 3"e
600S200-43 (50)	50	9' 9"e	8' 6"e	6' 10"e	9' 3"	7' 8"	5' 9"e	8' 10"e	8' 1"e	6' 10"e	9' 3"	7' 8"	5' 9"e
600S200-54	50	10' 6"	9' 6"	8' 1"e	11' 2"	9' 6"	7' 4"	9' 6"	8' 8"	7' 7"e	10' 8"	9' 6"	7' 4"
600S200-68	50	11' 3"	10' 2"	8' 10"	12' 8"	11' 6"	9' 3"	10' 2"	9' 3"	8' 1"	11' 6"	10' 4"	9' 1"
600S200-97	50	12' 6"	11' 4"	9' 10"	14' 1"	12' 9"	11' 2"	11' 4"	10' 3"	9' 0"	12' 9"	11' 7"	10' 1"
600S200-118	50	13' 2"	12' 0"	10' 6"	14' 10"	13' 6"	11' 9"	12' 0"	10' 10"	9' 6"	13' 6"	12' 3"	10' 8"
600S250-43	33	8' 9"e	7' 7"e	6' 2"e	8' 4"e	7' 0"e	5' 3"e	8' 9"e	7' 7"e	6' 2"e	8' 4"e	7' 0"e	5' 3"e
600S250-43 (50)	50	10' 0"e	8' 8"e	7' 1"e	9' 4"	7' 8"	5' 9"e	9' 2"e	8' 4"e	7' 1"e	9' 4"	7' 8"	5' 9"e
600S250-54	50	11' 0"	10' 0"e	8' 3"e	11' 4"	9' 8"	7' 6"	10' 0"	9' 0"	7' 10"e	11' 2"	9' 8"	7' 6"
600S250-68	50	11' 9"	10' 8"	9' 4"	13' 3"	11' 6"	9' 1"	10' 8"	9' 9"	8' 6"	12' 1"	11' 0"	9' 1"
600S250-97	50	13' 1"	11' 10"	10' 4"	14' 9"	13' 4"	11' 8"	11' 10"	10' 10"	9' 6"	13' 4"	12' 2"	10' 7"
600S250-118	50	13' 10"	12' 7"	11' 0"	15' 7"	14' 2"	12' 4"	12' 7"	11' 6"	10' 0"	14' 2"	12' 10"	11' 3"
600S300-54	50	11' 2"	10' 2"e	8' 4"e	11' 7"	9' 9"	7' 7"	10' 2"	9' 2"	8' 1"e	11' 4"	9' 9"	7' 7"
600S300-68	50	12' 2"	11' 1"	9' 8"	13' 8"	11' 8"	9' 2"	11' 1"	10' 1"	8' 9"	12' 4"	11' 3"	9' 2"
600S300-97	50	13' 8"	12' 4"	10' 10"	15' 4"	14' 0"	11' 7"	12' 4"	11' 3"	9' 10"	14' 0"	12' 8"	11' 1"
600S300-118	50	14' 6"	13' 2"	11' 6"	16' 3"	14' 9"	13' 0"	13' 2"	12' 0"	10' 6"	14' 9"	13' 6"	11' 9"
800S137-33	33	6' 9"e	5' 1"e	3' 4"e	4' 10"e	3' 9"e	2' 7"e	6' 9"e	5' 1"e	3' 4"e	4' 10"e	3' 9"e	2' 7"e
800S137-43	33	8' 8"e	7' 6"e	6' 1"e	7' 10"e	6' 7"e	4' 10"e	8' 8"e	7' 6"e	6' 1"e	7' 10"e	6' 7"e	4' 10"e
800S137-43 (50)	50	9' 10"e	8' 6"e	7' 0"e	8' 9"	7' 2"	5' 2"	9' 10"e	8' 6"e	7' 0"e	8' 9"	7' 2"	5' 2"
800S137-54	50	11' 7"	10' 1"e	8' 2"e	11' 7"	9' 9"	7' 8"	10' 10"	9' 10"e	8' 2"e	11' 7"	9' 9"	7' 8"
800S137-68	50	13' 0"	11' 9"	9' 8"e	13' 8"	11' 10"	9' 6"	11' 9"	10' 8"	9' 4"	13' 3"	11' 10"	9' 6"
800S137-97	50	14' 4"	13' 1"	11' 6"	16' 2"	14' 8"	12' 0"	13' 1"	11' 10"	10' 4"	14' 8"	13' 4"	11' 8"
800S162-33	33	6' 9"e	5' 1"e	3' 4"e	5' 0"e	3' 10"e	2' 7"e	6' 9"e	5' 1"e	3' 4"e	5' 0"e	3' 10"e	2' 7"e
800S162-43	33	9' 3"e	8' 1"e	6' 7"e	8' 3"e	6' 9"e	5' 1"e	9' 3"e	8' 1"e	6' 7"e	8' 3"e	6' 9"e	5' 1"e
800S162-43 (50)	50	10' 7"e	9' 2"e	7' 6"e	9' 0"	7' 3"	5' 3"	10' 6"e	9' 2"e	7' 6"e	9' 0"	7' 3"	5' 3"
800S162-54	50	12' 6"e	10' 9"e	8' 9"e	12' 3"	10' 4"	8' 0"	11' 4"	10' 3"e	8' 9"e	12' 3"	10' 4"	8' 0"
800S162-68	50	13' 6"	12' 3"	10' 4"e	14' 8"	12' 7"	10' 1"	12' 3"	11' 2"	9' 9"e	13' 9"	12' 6"	10' 1"
800S162-97	50	15' 0"	13' 8"	11' 10"	16' 10"	15' 3"	12' 8"	13' 8"	12' 4"	10' 9"	15' 3"	13' 10"	12' 2"
800S162-118	50	15' 10"	14' 4"	12' 7"	17' 10"	16' 2"	14' 2"	14' 4"	13' 1"	11' 6"	16' 2"	14' 8"	12' 10"
800S200-43	33	10' 0"e	8' 8"e	7' 1"e	9' 0"e	7' 3"e	5' 3"e	10' 0"e	8' 8"e	7' 1"e	9' 0"e	7' 3"e	5' 3"e
800S200-43 (50)	50	11' 4"e	9' 10"e	7' 6"e	9' 7"	7' 8"	5' 6"e	11' 2"e	9' 10"e	7' 6"e	9' 7"	7' 8"	5' 6"e
800S200-54	50	13' 2"e	11' 7"e	9' 4"e	13' 3"	11' 2"	8' 7"e	12' 0"	10' 10"e	9' 4"e	13' 3"	11' 2"	8' 7"e
800S200-68	50	14' 2"	12' 10"	11' 2"e	15' 10"	14' 0"	11' 2"	12' 10"	11' 8"	10' 2"e	14' 6"	13' 1"	11' 2"
800S200-97	50	15' 9"	14' 3"	12' 6"	17' 8"	16' 1"	14' 0"	14' 3"	13' 0"	11' 4"	16' 1"	14' 7"	12' 9"
800S200-118	50	16' 8"	15' 2"	13' 3"	18' 8"	17' 0"	14' 10"	15' 2"	13' 9"	12' 0"	17' 0"	15' 6"	13' 6"
800S250-43	33	10' 2"e	8' 10"e	7' 2"e	9' 0"e	7' 3"e	5' 3"e	10' 2"e	8' 10"e	7' 2"e	9' 0"e	7' 3"e	5' 3"e
800S250-43 (50)	50	11' 7"e	10' 1"e	7' 6"e	9' 7"	7' 8"	5' 6"e	11' 6"e	10' 1"e	7' 6"e	9' 7"	7' 8"	5' 6"e
800S250-54	50	13' 8"e	11' 9"e	9' 8"e	13' 4"	11' 3"	8' 8"e	12' 4"	11' 3"e	9' 8"e	13' 4"	11' 3"	8' 8"e
800S250-68	50	14' 9"	13' 4"	11' 3"e	16' 0"	13' 10"	11' 0"	13' 4"	12' 2"	10' 8"e	15' 1"	13' 8"	11' 0"
800S250-97	50	16' 6"	15' 0"	13' 1"	18' 6"	16' 9"	14' 8"	15' 0"	13' 7"	11' 10"	16' 9"	15' 3"	13' 3"
800S250-118	50	17' 6"	15' 10"	13' 10"	19' 7"	17' 9"	15' 7"	15' 10"	14' 4"	12' 7"	17' 9"	16' 2"	14' 1"
800S300-54	50	13' 9"e	12' 0"e	9' 9"e	13' 6"	11' 3"	8' 8"e	12' 8"e	11' 6"e	9' 9"e	13' 6"	11' 3"	8' 8"e
800S300-68	50	15' 2"	13' 9"	11' 6"e	16' 3"	14' 1"	11' 2"	13' 9"	12' 7"	11' 0"e	15' 6"	14' 1"	11' 2"
800S300-97	50	17' 1"	15' 6"	13' 7"	19' 2"	17' 4"	14' 7"	15' 6"	14' 1"	12' 3"	17' 4"	15' 9"	13' 9"
800S300-118	50	18' 2"	16' 6"	14' 4"	20' 4"	18' 6"	16' 2"	16' 6"	15' 0"	13' 1"	18' 6"	16' 9"	14' 8"
1000S162-33	33	5' 4"e	4' 0"e	2' 8"e	4' 2"e	3' 2"e	2' 1"e	5' 4"e	4' 0"e	2' 8"e	4' 2"e	3' 2"e	2' 1"e
1000S162-43	33	10' 4"e	9' 0"e	6' 0"e	8' 1"e	6' 4"e	4' 6"e	10' 4"e	9' 0"e	6' 0"e	8' 1"e	6' 4"e	4' 6"e
1000S162-43 (50)	50	11' 8"e	9' 0"e	6' 0"e	8' 6"e	6' 7"e	4' 7"e	11' 8"e	9' 0"e	6' 0"e	8' 6"e	6' 7"e	4' 7"e
1000S162-54	50	13' 10"e	12' 0"e	9' 9"e	12' 9"	10' 7"	7' 10"	13' 6"e	12' 0"e	9' 9"e	12' 9"	10' 7"	7' 10"
1000S162-68	50	16' 1"	14' 2"e	11' 7"e	16' 4"	14' 2"	11' 2"	14' 8"	13' 3"	11' 7"e	16' 4"	14' 2"	11' 2"
1000S162-97	50	18' 1"	16' 4"	14' 4"	20' 3"	18' 2"	14' 8"	16' 4"	14' 10"	13' 1"	18' 6"	16' 9"	14' 8"
1000S162-118	50	19' 2"	17' 4"	15' 2"	21' 6"	19' 7"	16' 7"	17' 4"	15' 9"	13' 9"	19' 7"	17' 9"	15' 6"
1000S200-43	33	11' 2"e	9' 0"e	6' 0"e	8' 3"e	6' 6"e	4' 7"e	11' 2"e	9' 0"e	6' 0"e	8' 3"e	6' 6"e	4' 7"e
1000S200-43 (50)	50	11' 10"e	9' 0"e	6' 0"e	8' 8"e	6' 8"e	4' 7"e	11' 10"e	9' 0"e	6' 0"e	8' 8"e	6' 8"e	4' 7"e
1000S200-54	50	14' 10"e	12' 10"e	10' 6"e	13' 2"	10' 10"	8' 0"e	14' 1"e	12' 9"e	10' 6"e	13' 2"	10' 10"	8' 0"e
1000S200-68	50	16' 10"	15' 2"e	12' 4"e	17' 6"	14' 10"	11' 8"	15' 3"	13' 10"e	12' 2"e	17' 2"	14' 10"	11' 8"
1000S200-97	50	18' 10"	17' 2"	15' 0"	21' 2"	19' 3"	15' 8"	17' 2"	15' 7"	13' 7"	19' 3"	17' 6"	15' 3"
1000S200-118	50	20' 0"	18' 2"	15' 10"	22' 6"	20' 4"	17' 7"	18' 2"	16' 7"	14' 6"	20' 4"	18' 7"	16' 2"

NOTE: See page 43 for Table Notes.

For more information, please contact Marino\WARE® Technical Services at 866.545.1545
This technical information reflects the most current information available and supersedes any and all
previous publications effective February 17, 2023 | MW-Cold Formed Catalog | © WARE Industries, Inc., 2023

15 psf Dead Load and 125 psf Live Load

MEMBER	F_y (ksi)	LIVE LOAD DEFLECTION L/360						LIVE LOAD DEFLECTION L/480					
		SINGLE SPAN			TWO EQUAL SPANS			SINGLE SPAN			TWO EQUAL SPANS		
		JOIST SPACING (in.) o.c.			JOIST SPACING (in.) o.c.			JOIST SPACING (in.) o.c.			JOIST SPACING (in.) o.c.		
		12	16	24	12	16	24	12	16	24	12	16	24
1000S250-43	33	11' 6"e	9' 0"e	6' 0"e	8' 4"e	6' 7"e	4' 7"e	11' 6"e	9' 0"e	6' 0"e	8' 4"e	6' 7"e	4' 7"e
1000S250-43 (50)	50	11' 10"e	9' 0"e	6' 0"e	8' 9"e	6' 9"e	4' 8"e	11' 10"e	9' 0"e	6' 0"e	8' 9"e	6' 9"e	4' 8"e
1000S250-54	50	15' 3"e	13' 3"e	10' 9"e	13' 7"	11' 2"	8' 2"e	14' 10"e	13' 3"e	10' 9"e	13' 7"	11' 2"	8' 2"e
1000S250-68	50	17' 8"	15' 7"e	12' 8"e	18' 0"	15' 7"	12' 3"e	16' 0"	14' 7"e	12' 8"e	18' 0"	15' 7"	12' 3"e
1000S250-97	50	19' 8"	17' 10"	15' 7"	22' 1"	20' 1"	16' 10"	17' 10"	16' 3"	14' 2"	20' 1"	18' 2"	15' 10"
1000S250-118	50	20' 10"	19' 0"	16' 7"	23' 6"	21' 3"	18' 7"	19' 0"	17' 2"	15' 1"	21' 3"	19' 4"	16' 10"
1000S300-54	50	15' 6"e	13' 6"e	11' 0"e	13' 8"	11' 2"	8' 2"e	15' 1"e	13' 6"e	11' 0"e	13' 8"	11' 2"	8' 2"e
1000S300-68	50	18' 1"	15' 10"e	12' 10"e	18' 3"	15' 9"	12' 3"e	16' 6"	15' 0"e	12' 10"e	18' 3"	15' 9"	12' 3"e
1000S300-97	50	20' 4"	18' 6"	16' 2"	22' 9"	20' 3"	16' 7"	18' 6"	16' 9"	14' 8"	20' 9"	18' 10"	16' 6"
1000S300-118	50	21' 8"	19' 8"	17' 2"	24' 3"	22' 1"	19' 3"	19' 8"	17' 10"	15' 7"	22' 1"	20' 1"	17' 6"
1000S350-54	50	17' 3"e	15' 0"e	11' 10"e	14' 7"	11' 9"	8' 6"e	16' 0"e	14' 6"e	11' 10"e	14' 7"	11' 9"	8' 6"e
1000S350-68	50	19' 2"e	17' 4"e	14' 4"e	20' 3"	17' 1"	13' 3"e	17' 4"	15' 9"e	13' 9"e	19' 6"	17' 1"	13' 3"e
1000S350-97	50	21' 4"	19' 6"	17' 0"	24' 1"	21' 10"	18' 1"	19' 6"	17' 8"	15' 6"	21' 10"	19' 10"	17' 3"
1000S350-118	50	22' 9"	20' 8"	18' 1"	25' 7"	23' 2"	20' 3"	20' 8"	18' 9"	16' 4"	23' 2"	21' 1"	18' 4"
1200S162-43	33	9' 10"e	7' 4"e	5' 0"e	7' 4"e	5' 8"e	3' 10"e	9' 10"e	7' 4"e	5' 0"e	7' 4"e	5' 8"e	3' 10"e
1200S162-43 (50)	50	9' 10"e	7' 4"e	5' 0"e	7' 7"e	5' 9"e	3' 10"e	9' 10"e	7' 4"e	5' 0"e	7' 7"e	5' 9"e	3' 10"e
1200S162-54	50	14' 10"e	12' 10"e	9' 9"e	12' 8"e	10' 2"e	7' 3"e	14' 10"e	12' 10"e	9' 9"e	12' 8"e	10' 2"e	7' 3"e
1200S162-68	50	17' 8"e	15' 4"e	12' 7"e	17' 8"	14' 10"	11' 4"	16' 10"	15' 4"e	12' 7"e	17' 8"	14' 10"	11' 4"
1200S162-97	50	21' 1"	19' 2"	16' 3"	23' 0"	19' 10"	16' 3"	19' 2"	17' 4"	15' 2"	21' 6"	19' 6"	16' 3"
1200S162-118	50	22' 4"	20' 4"	17' 9"	25' 1"	22' 9"	18' 8"	20' 4"	18' 6"	16' 2"	22' 9"	20' 9"	18' 1"
1200S200-54	50	16' 1"e	14' 0"e	9' 9"e	13' 0"e	10' 3"e	7' 3"e	16' 1"e	14' 0"e	9' 9"e	13' 0"e	10' 3"e	7' 3"e
1200S200-68	50	19' 1"e	16' 6"e	13' 6"e	18' 6"	15' 6"	11' 9"e	17' 7"	16' 0"e	13' 6"e	18' 6"	15' 6"	11' 9"e
1200S200-97	50	22' 0"	20' 0"	17' 4"e	24' 7"	21' 3"	17' 4"	20' 0"	18' 1"	15' 9"	22' 4"	20' 3"	17' 4"
1200S200-118	50	23' 3"	21' 2"	18' 6"	26' 2"	23' 9"	19' 10"	21' 2"	19' 3"	16' 9"	23' 9"	21' 7"	18' 10"
1200S250-54	50	16' 8"e	14' 4"e	9' 9"e	13' 1"e	10' 4"e	7' 4"e	16' 8"e	14' 4"e	9' 9"e	13' 1"e	10' 4"e	7' 4"e
1200S250-68	50	19' 8"e	17' 1"e	13' 10"e	18' 7"	15' 7"	11' 10"e	18' 4"e	16' 8"e	13' 10"e	18' 7"	15' 7"	11' 10"e
1200S250-97	50	22' 9"	20' 8"	18' 0"e	25' 4"	22' 0"	18' 0"	20' 8"	18' 9"	16' 6"	23' 3"	21' 2"	18' 0"
1200S250-118	50	24' 2"	22' 0"	19' 2"	27' 2"	24' 8"	20' 7"	22' 0"	20' 0"	17' 6"	24' 8"	22' 6"	19' 7"
1200S300-54	50	17' 0"e	14' 8"e	9' 9"e	13' 2"e	10' 6"e	7' 4"e	17' 0"e	14' 8"e	9' 9"e	13' 2"e	10' 6"e	7' 4"e
1200S300-68	50	20' 1"e	17' 4"e	14' 2"e	19' 3"	16' 1"	12' 2"e	19' 1"e	17' 3"e	14' 2"e	19' 3"	16' 1"	12' 2"e
1200S300-97	50	23' 7"	21' 4"	18' 3"e	25' 10"	22' 4"	18' 3"	21' 4"	19' 6"	17' 0"e	24' 1"	21' 10"	18' 3"
1200S300-118	50	25' 1"	22' 9"	19' 10"	28' 1"	25' 7"	21' 10"	22' 9"	20' 8"	18' 1"	25' 7"	23' 2"	20' 3"
1200S350-54	50	19' 0"e	14' 9"e	9' 9"e	13' 9"e	10' 9"e	7' 6"e	18' 4"e	14' 9"e	9' 9"e	13' 9"e	10' 9"e	7' 6"e
1200S350-68	50	22' 1"e	19' 4"e	15' 9"e	20' 10"	17' 3"	12' 10"e	20' 1"e	18' 3"e	15' 9"e	20' 10"	17' 3"	12' 10"e
1200S350-97	50	24' 8"	22' 6"	19' 7"e	27' 9"	24' 8"	20' 2"	22' 6"	20' 4"	17' 9"e	25' 2"	22' 10"	20' 0"
1200S350-118	50	26' 3"	23' 10"	20' 10"	29' 6"	26' 9"	23' 4"	23' 10"	21' 8"	19' 0"	26' 9"	24' 4"	21' 3"
1400S162-54	50	15' 9"e	12' 7"e	8' 4"e	12' 0"e	9' 4"e	6' 6"e	15' 9"e	12' 7"e	8' 4"e	12' 0"e	9' 4"e	6' 6"e
1400S162-68	50	18' 9"e	16' 3"e	13' 3"e	18' 2"	15' 0"	11' 2"	18' 9"e	16' 3"e	13' 3"e	18' 2"	15' 0"	11' 2"
1400S162-97	50	23' 10"	21' 4"	17' 6"e	24' 8"	21' 4"	17' 6"	21' 8"	19' 8"	17' 2"e	24' 4"	21' 4"	17' 6"
1400S162-118	50	25' 7"	23' 2"	20' 2"	28' 7"	24' 9"	20' 2"	23' 2"	21' 1"	18' 6"	26' 1"	23' 8"	20' 2"
1400S200-54	50	16' 9"e	12' 7"e	8' 4"e	12' 2"e	9' 6"e	6' 6"e	16' 9"e	12' 7"e	8' 4"e	12' 2"e	9' 6"e	6' 6"e
1400S200-68	50	20' 4"e	17' 7"e	14' 4"e	18' 10"	15' 6"	11' 6"e	19' 10"e	17' 7"e	14' 4"e	18' 10"	15' 6"	11' 6"e
1400S200-97	50	24' 9"	22' 7"	18' 8"e	26' 6"	22' 10"	18' 8"	22' 7"	20' 6"	17' 10"e	25' 3"	22' 10"	18' 8"
1400S200-118	50	26' 7"	24' 1"	21' 1"	29' 9"	26' 4"	21' 7"	24' 1"	21' 10"	19' 2"	27' 1"	24' 7"	21' 6"
1400S250-54	50	16' 9"e	12' 7"e	8' 4"e	12' 2"e	9' 6"e	6' 6"e	16' 9"e	12' 7"e	8' 4"e	12' 2"e	9' 6"e	6' 6"e
1400S250-68	50	21' 1"e	18' 3"e	14' 10"e	19' 0"	15' 7"	11' 6"e	20' 7"e	18' 3"e	14' 10"e	19' 0"	15' 7"	11' 6"e
1400S250-97	50	25' 9"	23' 4"	19' 4"e	27' 4"	23' 9"	19' 3"	23' 4"	21' 3"	18' 7"e	26' 3"	23' 9"	19' 3"
1400S250-118	50	27' 6"	25' 0"	21' 10"	30' 10"	27' 4"	22' 4"	25' 0"	22' 8"	19' 10"	28' 1"	25' 6"	22' 3"
1400S300-54	50	16' 9"e	12' 7"e	8' 4"e	12' 3"e	9' 6"e	6' 6"e	16' 9"e	12' 7"e	8' 4"e	12' 3"e	9' 6"e	6' 6"e
1400S300-68	50	21' 7"e	18' 8"e	15' 3"e	19' 2"	15' 8"	11' 7"e	21' 2"e	18' 8"e	15' 3"e	19' 2"	15' 8"	11' 7"e
1400S300-97	50	26' 7"	24' 2"	19' 9"e	28' 1"	24' 3"	19' 9"	24' 2"	22' 0"	19' 2"e	27' 2"	24' 3"	19' 9"
1400S300-118	50	28' 4"	25' 9"	22' 7"	31' 10"	28' 1"	22' 10"	25' 9"	23' 6"	20' 6"	29' 0"	26' 3"	22' 10"
1400S350-54	50	16' 9"e	12' 7"e	8' 4"e	12' 7"e	9' 8"e	6' 7"e	16' 9"e	12' 7"e	8' 4"e	12' 7"e	9' 8"e	6' 7"e
1400S350-68	50	24' 2"e	20' 10"e	16' 10"e	20' 8"	16' 9"	12' 1"e	22' 8"e	20' 7"e	16' 10"e	20' 8"	16' 9"	12' 1"e
1400S350-97	50	28' 0"	25' 4"e	21' 10"e	31' 0"	26' 9"	21' 10"	25' 4"	23' 1"	20' 2"e	28' 6"	25' 10"	21' 10"
1400S350-118	50	29' 8"	27' 0"	23' 7"	33' 4"	30' 3"	26' 0"	27' 0"	24' 6"	21' 4"	30' 3"	27' 7"	24' 1"
1600S162-68	50	19' 8"e	17' 1"e	14' 0"e	18' 2"e	14' 8"e	10' 7"e	19' 8"e	17' 1"e	14' 0"e	18' 2"e	14' 8"e	10' 7"e
1600S162-97	50	26' 1"	22' 7"	18' 4"e	26' 1"	22' 7"	18' 4"	24' 2"	22' 0"	18' 4"e	26' 1"	22' 7"	18' 4"
1600S162-118	50	28' 7"	26' 0"	21' 6"	30' 4"	26' 3"	21' 6"	26' 0"	23' 7"	20' 7"	29' 1"	26' 3"	21' 6"
1600S200-68	50	21' 4"e	18' 6"e	14' 8"e	18' 8"e	15' 1"e	10' 9"e	21' 4"e	18' 6"e	14' 8"e	18' 8"e	15' 1"e	10' 9"e
1600S200-97	50	27' 7"	24' 3"e	19' 9"e	28' 0"	24' 3"	19' 6"	25' 1"	22' 9"	19' 9"e	28' 0"	24' 3"	19' 6"
1600S200-118	50	29' 7"	26' 10"	23' 0"	32' 6"	28' 2"	23' 0"	26' 10"	24' 6"	21' 4"	30' 2"	27' 4"	23' 0"
1600S250-68	50	22' 3"e	19' 3"e	14' 8"e	18' 9"e	15' 1"e	10' 9"e	22' 3"e	19' 3"e	14' 8"e	18' 9"e	15' 1"e	10' 9"e
1600S250-97	50	28' 7"	25' 3"e	20' 7"e	29' 2"	25' 3"	20' 1"	25' 10"	23' 7"	20' 7"e	29' 1"	25' 3"	20' 1"
1600S250-118	50	30' 7"	27' 9"	23' 10"e	33' 9"	29' 3"	23' 10"	27' 9"	25' 3"	22' 1"	31' 2"	28' 4"	23' 10"
1600S300-68	50	22' 10"e	19' 10"e	14' 8"e	18' 10"e	15' 2"e	10' 9"e	22' 10"e	19' 10"e	14' 8"e	18' 10"e	15' 2"e	10' 9"e
1600S300-97	50	29' 4"	25' 10"e	21' 2"e	30' 0"	25' 10"	20' 7"	26' 8"	24' 3"e	21' 2"e	30' 0"	25' 10"	20' 7"
1600S300-118	50	31' 7"	28' 8"	24' 7"e	34' 8"	30' 1"	24' 7"	28' 8"	26' 1"	22' 9"	32' 2"	29' 3"	24' 7"
1600S350-68	50	25' 8"e	22' 1"e	14' 8"e	19' 10"e	15' 9"e	11' 1"e	24' 7"e	22' 1"e	14' 8"e	19' 10"e	15' 9"e	11' 1"e
1600S350-97	50	30' 9"	28' 0"e	23' 4"e	32' 6"	27' 6"	21' 7"e	28' 0"	25' 4"e	22' 2"e	31' 4"	27' 6"	21' 7"e
1600S350-118	50	33' 0"	30' 0"	26' 2"e	37' 1"	33' 0"	26' 10"	30' 0"	27' 2"	23' 9"e	33' 8"	30' 7"	26' 8"

NOTE: See page 43 for Table Notes.

FLOOR JOIST SPANS

40 psf Dead Load and 125 psf Live Load

MEMBER	F_y (ksi)	LIVE LOAD DEFLECTION L/360						LIVE LOAD DEFLECTION L/480					
		SINGLE SPAN			TWO EQUAL SPANS			SINGLE SPAN			TWO EQUAL SPANS		
		JOIST SPACING (in.) o.c.			JOIST SPACING (in.) o.c.			JOIST SPACING (in.) o.c.			JOIST SPACING (in.) o.c.		
		12	16	24	12	16	24	12	16	24	12	16	24
600S137-33	33	5' 9"e	5' 0"e	3' 10"e	4' 9"e	3' 10"e	2' 9"e	5' 9"e	5' 0"e	3' 10"e	4' 9"e	3' 10"e	2' 9"e
600S137-43	33	6' 10"e	6' 0"e	4' 10"e	6' 7"e	5' 6"e	4' 3"e	6' 10"e	6' 0"e	4' 10"e	6' 7"e	5' 6"e	4' 3"e
600S137-43 (50)	50	7' 10"e	6' 10"e	5' 7"e	7' 4"	6' 2"	4' 8"	7' 10"e	6' 10"e	5' 7"e	7' 4"	6' 2"	4' 8"
600S137-54	50	9' 3"	8' 0"	6' 7"e	9' 1"	7' 8"	6' 0"	8' 8"	7' 10"	6' 7"e	9' 1"	7' 8"	6' 0"
600S137-68	50	10' 3"	9' 3"	7' 7"	10' 8"	9' 2"	7' 3"	9' 3"	8' 6"	7' 4"	10' 6"	9' 2"	7' 3"
600S137-97	50	11' 4"	10' 3"	9' 0"	12' 8"	11' 7"	9' 4"	10' 3"	9' 4"	8' 2"	11' 7"	10' 6"	9' 2"
600S162-33	33	6' 2"e	5' 4"e	3' 10"e	5' 1"e	4' 1"e	2' 10"e	6' 2"e	5' 4"e	3' 10"e	5' 1"e	4' 1"e	2' 10"e
600S162-43	33	7' 7"e	6' 7"e	5' 4"e	7' 3"e	6' 1"e	4' 7"e	7' 7"e	6' 7"e	5' 4"e	7' 3"e	6' 1"e	4' 7"e
600S162-43 (50)	50	8' 6"e	7' 4"e	6' 0"e	8' 0"	6' 7"	4' 10"e	8' 6"e	7' 4"e	6' 0"e	8' 0"	6' 7"	4' 10"e
600S162-54	50	10' 0"	8' 10"e	7' 2"e	10' 2"	8' 7"	6' 7"	9' 1"	8' 3"	7' 2"e	10' 2"	8' 7"	6' 7"
600S162-68	50	10' 8"	9' 8"	8' 6"e	12' 0"	10' 2"	8' 1"	9' 8"	8' 10"	7' 8"	10' 10"	9' 10"	8' 1"
600S162-97	50	11' 10"	10' 9"	9' 4"	13' 3"	12' 1"	9' 9"	10' 9"	9' 9"	8' 7"	12' 1"	11' 0"	9' 7"
600S162-118	50	12' 6"	11' 4"	10' 0"	14' 1"	12' 9"	10' 7"	11' 4"	10' 4"	9' 0"	12' 9"	11' 7"	10' 2"
600S200-33	33	6' 7"e	5' 8"e	3' 10"e	5' 2"e	4' 1"e	2' 10"e	6' 7"e	5' 8"e	3' 10"e	5' 2"e	4' 1"e	2' 10"e
600S200-43	33	7' 10"e	6' 9"e	5' 7"e	7' 4"e	6' 2"e	4' 8"e	7' 10"e	6' 9"e	5' 7"e	7' 4"e	6' 2"e	4' 8"e
600S200-43 (50)	50	9' 0"e	7' 9"e	6' 4"e	8' 4"	6' 10"	5' 1"e	8' 10"e	7' 9"e	6' 4"e	8' 4"	6' 10"	5' 1"e
600S200-54	50	10' 6"	9' 1"e	7' 4"e	10' 2"	8' 7"	6' 7"	9' 6"	8' 8"e	7' 4"e	10' 2"	8' 7"	6' 7"
600S200-68	50	11' 3"	10' 2"	8' 10"e	12' 7"	10' 8"	8' 4"	10' 2"	9' 3"	8' 1"	11' 6"	10' 4"	8' 4"
600S200-97	50	12' 6"	11' 4"	9' 10"	14' 1"	12' 9"	10' 4"	11' 4"	10' 3"	9' 0"	12' 9"	11' 7"	10' 1"
600S200-118	50	13' 2"	12' 0"	10' 6"	14' 10"	13' 6"	11' 1"	12' 0"	10' 10"	9' 6"	13' 6"	12' 3"	10' 8"
600S250-43	33	8' 1"e	7' 0"e	5' 8"e	7' 7"e	6' 3"e	4' 8"e	8' 1"e	7' 0"e	5' 8"e	7' 7"e	6' 3"e	4' 8"e
600S250-43 (50)	50	9' 2"e	8' 0"e	6' 6"e	8' 4"	6' 10"	5' 1"e	9' 2"e	8' 0"e	6' 6"e	8' 4"	6' 10"	5' 1"e
600S250-54	50	10' 9"	9' 3"e	7' 7"e	10' 4"	8' 8"	6' 8"	10' 0"	9' 0"e	7' 7"e	10' 4"	8' 8"	6' 8"
600S250-68	50	11' 9"	10' 8"	8' 10"e	12' 3"	10' 4"	8' 2"	10' 8"	9' 9"	8' 6"e	12' 1"	10' 4"	8' 2"
600S250-97	50	13' 1"	11' 10"	10' 4"	14' 9"	13' 4"	10' 8"	11' 10"	10' 10"	9' 6"	13' 4"	12' 2"	10' 7"
600S250-118	50	13' 10"	12' 7"	11' 0"	15' 7"	14' 2"	11' 6"	12' 7"	11' 6"	10' 0"	14' 2"	12' 10"	11' 3"
600S300-54	50	10' 10"	9' 6"e	7' 8"e	10' 6"	8' 10"	6' 9"	10' 2"	9' 2"e	7' 8"e	10' 6"	8' 10"	6' 9"
600S300-68	50	12' 2"	11' 1"	9' 0"e	12' 6"	10' 7"	8' 4"	11' 1"	10' 1"	8' 9"e	12' 4"	10' 7"	8' 4"
600S300-97	50	13' 8"	12' 4"	10' 10"	15' 4"	13' 4"	10' 7"	12' 4"	11' 3"	9' 10"	14' 0"	12' 8"	10' 7"
600S300-118	50	14' 6"	13' 2"	11' 6"	16' 3"	14' 9"	11' 10"	13' 2"	12' 0"	10' 6"	14' 9"	13' 6"	11' 9"
800S137-33	33	5' 8"e	4' 3"e	2' 10"e	4' 3"e	3' 3"e	2' 2"e	5' 8"e	4' 3"e	2' 10"e	4' 3"e	3' 3"e	2' 2"e
800S137-43	33	8' 0"e	6' 10"e	5' 7"e	7' 1"e	5' 10"e	4' 3"e	8' 0"e	6' 10"e	5' 7"e	7' 1"e	5' 10"e	4' 3"e
800S137-43	50	9' 1"e	7' 10"e	6' 4"e	7' 9"	6' 3"	4' 7"	9' 1"e	7' 10"e	6' 4"e	7' 9"	6' 3"	4' 7"
800S137-54	50	10' 8"e	9' 3"e	7' 7"e	10' 7"	8' 10"	6' 10"	10' 8"e	9' 3"e	7' 7"e	10' 7"	8' 10"	6' 10"
800S137-68	50	12' 7"	11' 0"	8' 10"e	12' 7"	10' 10"	8' 8"	11' 9"	10' 8"	8' 10"e	12' 7"	10' 10"	8' 8"
800S137-97	50	14' 4"	13' 1"	11' 4"	15' 9"	13' 7"	11' 0"	13' 1"	11' 10"	10' 4"	14' 8"	13' 4"	11' 0"
800S162-33	33	5' 8"e	4' 3"e	2' 10"e	4' 3"e	3' 3"e	2' 3"e	5' 8"e	4' 3"e	2' 10"e	4' 3"e	3' 3"e	2' 3"e
800S162-43	33	8' 7"e	7' 6"e	6' 1"e	7' 6"e	6' 1"e	4' 6"e	8' 7"e	7' 6"e	6' 1"e	7' 6"e	6' 1"e	4' 6"e
800S162-43	50	9' 9"e	8' 6"e	6' 4"e	8' 0"	6' 6"	4' 7"	9' 9"e	8' 6"e	6' 4"e	8' 0"	6' 6"	4' 7"
800S162-54	50	11' 6"e	10' 0"e	8' 1"e	11' 1"	9' 4"	7' 2"e	11' 4"e	10' 0"e	8' 1"e	11' 1"	9' 4"	7' 2"e
800S162-68	50	13' 6"	11' 8"	9' 6"e	13' 6"	11' 6"	9' 1"	12' 3"	11' 2"	9' 6"e	13' 6"	11' 6"	9' 1"
800S162-97	50	15' 0"	13' 8"	11' 10"	16' 9"	14' 4"	11' 7"	13' 8"	12' 4"	10' 9"	15' 3"	13' 10"	11' 7"
800S162-118	50	15' 10"	14' 4"	12' 7"	17' 10"	16' 2"	13' 10"	14' 4"	13' 1"	11' 6"	16' 2"	14' 8"	12' 10"
800S200-43	33	9' 2"e	8' 0"e	6' 4"e	8' 0"e	6' 4"e	4' 7"e	9' 2"e	8' 0"e	6' 4"e	8' 0"e	6' 4"e	4' 7"e
800S200-43 (50)	50	10' 6"e	9' 1"e	6' 4"e	8' 6"	6' 8"	4' 9"e	10' 6"e	9' 1"e	6' 4"e	8' 6"	6' 8"	4' 9"e
800S200-54	50	12' 3"e	10' 7"e	8' 8"e	12' 1"	10' 1"	7' 8"e	12' 0"e	10' 7"e	8' 8"e	12' 1"	10' 1"	7' 8"e
800S200-68	50	14' 2"	12' 10"e	10' 6"e	14' 10"	12' 10"	10' 2"	12' 10"	11' 8"	10' 2"e	14' 6"	12' 10"	10' 2"
800S200-97	50	15' 9"	14' 3"	12' 6"	17' 8"	16' 1"	13' 2"	14' 3"	13' 0"	11' 4"	16' 1"	14' 7"	12' 9"
800S200-118	50	16' 8"	15' 2"	13' 3"	18' 8"	17' 0"	14' 8"	15' 2"	13' 9"	12' 0"	17' 0"	15' 6"	13' 6"
800S250-43	33	9' 4"e	8' 2"e	6' 4"e	8' 0"e	6' 6"e	4' 7"e	9' 4"e	8' 2"e	6' 4"e	8' 0"e	6' 6"e	4' 7"e
800S250-43 (50)	50	10' 8"e	9' 3"e	6' 4"e	8' 6"	6' 9"	4' 9"e	10' 8"e	9' 3"e	6' 4"e	8' 6"	6' 9"	4' 9"e
800S250-54	50	12' 7"e	10' 10"e	8' 10"e	12' 2"	10' 2"	7' 8"e	12' 4"e	10' 10"e	8' 10"e	12' 2"	10' 2"	7' 8"e
800S250-68	50	14' 8"	12' 9"e	10' 4"e	14' 8"	12' 7"	9' 10"	13' 4"	12' 2"e	10' 4"e	14' 8"	12' 7"	9' 10"
800S250-97	50	16' 6"	15' 0"	13' 1"	18' 6"	16' 9"	13' 6"	15' 0"	13' 7"	11' 10"	16' 9"	15' 3"	13' 3"
800S250-118	50	17' 6"	15' 10"	13' 10"	19' 7"	17' 9"	15' 2"	15' 10"	14' 4"	12' 7"	17' 9"	16' 2"	14' 1"
800S300-54	50	12' 8"e	11' 0"e	9' 0"e	12' 2"	10' 2"	7' 8"e	12' 8"e	11' 0"e	9' 0"e	12' 2"	10' 2"	7' 8"e
800S300-68	50	15' 0"	13' 0"e	10' 7"e	15' 0"	12' 10"	10' 1"	13' 9"	12' 7"e	10' 7"e	15' 0"	12' 10"	10' 1"
800S300-97	50	17' 1"	15' 6"	13' 6"	19' 1"	16' 6"	13' 3"	15' 6"	14' 1"	12' 3"	17' 4"	15' 9"	13' 3"
800S300-118	50	18' 2"	16' 6"	14' 4"	20' 4"	18' 6"	15' 9"	16' 6"	15' 0"	13' 1"	18' 6"	16' 9"	14' 8"
1000S162-33	33	4' 7"e	3' 4"e	2' 3"e	3' 7"e	2' 8"e	1' 9"e	4' 7"e	3' 4"e	2' 3"e	3' 7"e	2' 8"e	1' 9"e
1000S162-43	33	9' 6"e	7' 7"e	5' 1"e	7' 1"e	5' 7"e	3' 10"e	9' 6"e	7' 7"e	5' 1"e	7' 1"e	5' 7"e	3' 10"e
1000S162-43 (50)	50	10' 1"e	7' 7"e	5' 1"e	7' 4"e	5' 8"e	3' 10"e	10' 1"e	7' 7"e	5' 1"e	7' 4"e	5' 8"e	3' 10"e
1000S162-54	50	12' 9"e	11' 1"e	9' 0"e	11' 6"	9' 4"	6' 10"e	12' 9"e	11' 1"e	9' 0"e	11' 6"	9' 4"	6' 10"e
1000S162-68	50	15' 1"	13' 1"e	10' 8"e	15' 1"	12' 10"	10' 1"	14' 8"	13' 1"e	10' 8"e	15' 1"	12' 10"	10' 1"
1000S162-97	50	18' 1"	16' 4"	13' 8"	19' 3"	16' 8"	13' 6"	16' 4"	14' 10"	13' 1"	18' 6"	16' 8"	13' 6"
1000S162-118	50	19' 2"	17' 4"	15' 2"	21' 6"	18' 9"	15' 2"	17' 4"	15' 9"	13' 9"	19' 7"	17' 9"	15' 2"
1000S200-43	33	10' 1"e	7' 7"e	5' 1"e	7' 2"e	5' 8"e	3' 10"e	10' 1"e	7' 7"e	5' 1"e	7' 2"e	5' 8"e	3' 10"e
1000S200-43 (50)	50	10' 1"e	7' 7"e	5' 1"e	7' 6"e	5' 9"e	4' 0"e	10' 1"e	7' 7"e	5' 1"e	7' 6"e	5' 9"e	4' 0"e
1000S200-54	50	13' 8"e	11' 10"e	9' 8"e	11' 9"	9' 7"	7' 1"e	13' 8"e	11' 10"e	9' 8"e	11' 9"	9' 7"	7' 1"e
1000S200-68	50	16' 1"e	14' 0"e	11' 4"e	16' 0"	13' 6"	10' 6"e	15' 3"	13' 10"e	11' 4"e	16' 0"	13' 6"	10' 6"e
1000S200-97	50	18' 10"	17' 2"	14' 6"	20' 7"	17' 9"	14' 4"	17' 2"	15' 7"	13' 7"	19' 3"	17' 6"	14' 4"
1000S200-118	50	20' 0"	18' 2"	15' 10"	22' 6"	20' 0"	16' 2"	18' 2"	16' 7"	14' 6"	20' 4"	18' 7"	16' 2"

NOTE: See page 43 for Table Notes.

For more information, please contact Marino\WARE® Technical Services at 866.545.1545
This technical information reflects the most current information available and supersedes any and all
previous publications effective February 17, 2023 | MW-Cold Formed Catalog | © WARE Industries, Inc., 2023

40 psf Dead Load and 125 psf Live Load

MEMBER	F_y (ksi)	LIVE LOAD DEFLECTION L/360						LIVE LOAD DEFLECTION L/480					
		SINGLE SPAN			TWO EQUAL SPANS			SINGLE SPAN			TWO EQUAL SPANS		
		JOIST SPACING (in.) o.c.			JOIST SPACING (in.) o.c.			JOIST SPACING (in.) o.c.			JOIST SPACING (in.) o.c.		
		12	16	24	12	16	24	12	16	24	12	16	24
1000S250-43	33	10' 1"e	7' 7"e	5' 1"e	7' 4"e	5' 8"e	3' 10"e	10' 1"e	7' 7"e	5' 1"e	7' 4"e	5' 8"e	3' 10"e
1000S250-43 (50)	50	10' 1"e	7' 7"e	5' 1"e	7' 7"e	5' 9"e	4' 0"e	10' 1"e	7' 7"e	5' 1"e	7' 7"e	5' 9"e	4' 0"e
1000S250-54	50	14' 1"e	12' 2"e	10' 0"e	12' 2"	9' 10"	7' 2"e	14' 1"e	12' 2"e	10' 0"e	12' 2"	9' 10"	7' 2"e
1000S250-68	50	16' 7"e	14' 4"e	11' 8"e	16' 7"	14' 3"	11' 1"e	16' 0"e	14' 4"e	11' 8"e	16' 7"	14' 3"	11' 1"e
1000S250-97	50	19' 8"	17' 10"	15' 7"e	22' 0"	19' 1"	15' 7"	17' 10"	16' 3"	14' 2"	20' 1"	18' 2"	15' 7"
1000S250-118	50	20' 10"	19' 0"	16' 7"	23' 6"	21' 3"	18' 0"	19' 0"	17' 2"	15' 1"	21' 3"	19' 4"	16' 10"
1000S300-54	50	14' 3"e	12' 4"e	10' 1"e	12' 2"	9' 10"	7' 2"e	14' 3"e	12' 4"e	10' 1"e	12' 2"	9' 10"	7' 2"e
1000S300-68	50	16' 10"e	14' 7"e	11' 10"e	16' 10"	14' 3"	11' 1"e	16' 6"e	14' 7"e	11' 10"e	16' 10"	14' 3"	11' 1"e
1000S300-97	50	20' 4"	18' 6"	15' 3"e	21' 7"	18' 8"	15' 3"	18' 6"	16' 9"	14' 8"e	20' 9"	18' 8"	15' 3"
1000S300-118	50	21' 8"	19' 8"	17' 2"	24' 3"	22' 1"	18' 2"	19' 8"	17' 10"	15' 7"	22' 1"	20' 1"	17' 6"
1000S350-54	50	16' 0"e	13' 9"e	10' 1"e	12' 10"	10' 4"e	7' 4"e	16' 0"e	13' 9"e	10' 1"e	12' 10"	10' 4"e	7' 4"e
1000S350-68	50	18' 8"e	16' 2"e	13' 2"e	18' 4"	15' 6"e	11' 10"e	17' 4"e	15' 9"e	13' 2"e	18' 4"	15' 6"e	11' 10"e
1000S350-97	50	21' 4"	19' 6"	16' 9"e	23' 9"	20' 7"	16' 6"	19' 6"	17' 8"	15' 6"e	21' 10"	19' 10"	16' 6"
1000S350-118	50	22' 9"	20' 8"	18' 1"	25' 7"	23' 2"	19' 8"	20' 8"	18' 9"	16' 4"	23' 2"	21' 1"	18' 4"
1200S162-43	33	8' 4"e	6' 3"e	4' 2"e	6' 4"e	4' 10"e	3' 3"e	8' 4"e	6' 3"e	4' 2"e	6' 4"e	4' 10"e	3' 3"e
1200S162-43 (50)	50	8' 4"e	6' 3"e	4' 2"e	6' 6"e	4' 10"e	3' 3"e	8' 4"e	6' 3"e	4' 2"e	6' 6"e	4' 10"e	3' 3"e
1200S162-54	50	13' 8"e	11' 10"e	8' 3"e	11' 2"e	8' 10"e	6' 3"e	13' 8"e	11' 10"e	8' 3"e	11' 2"e	8' 10"e	6' 3"e
1200S162-68	50	16' 3"e	14' 2"e	11' 7"e	16' 0"	13' 4"	10' 2"e	16' 3"e	14' 2"e	11' 7"e	16' 0"	13' 4"	10' 2"e
1200S162-97	50	21' 1"	18' 4"	15' 0"e	21' 2"	18' 4"	15' 0"	19' 2"	17' 4"	15' 0"e	21' 2"	18' 4"	15' 0"
1200S162-118	50	22' 4"	20' 4"	17' 2"	24' 4"	21' 1"	17' 2"	20' 4"	18' 6"	16' 2"	22' 9"	20' 9"	17' 2"
1200S200-54	50	14' 10"e	12' 6"e	8' 3"e	11' 4"e	9' 0"e	6' 3"e	14' 10"e	12' 6"e	8' 3"e	11' 4"e	9' 0"e	6' 3"e
1200S200-68	50	17' 7"e	15' 2"e	12' 4"e	16' 8"	13' 10"	10' 6"e	17' 7"e	15' 2"e	12' 4"e	16' 8"	13' 10"	10' 6"e
1200S200-97	50	22' 0"	19' 7"	16' 0"e	22' 7"	19' 7"	15' 10"	20' 0"	18' 1"	15' 9"e	22' 4"	19' 7"	15' 10"
1200S200-118	50	23' 3"	21' 2"	18' 4"	26' 0"	22' 6"	18' 3"	21' 2"	19' 3"	16' 9"	23' 9"	21' 7"	18' 3"
1200S250-54	50	15' 4"e	12' 6"e	8' 3"e	11' 6"e	9' 1"e	6' 3"e	15' 4"e	12' 6"e	8' 3"e	11' 6"e	9' 1"e	6' 3"e
1200S250-68	50	18' 2"e	15' 8"e	12' 9"e	16' 9"	14' 0"	10' 7"e	18' 2"e	15' 8"e	12' 9"e	16' 9"	14' 0"	10' 7"e
1200S250-97	50	22' 9"	20' 3"	16' 6"e	23' 4"	20' 3"	16' 6"	20' 8"	18' 9"	16' 6"e	23' 3"	20' 3"	16' 6"
1200S250-118	50	24' 2"	22' 0"	19' 0"	26' 10"	23' 3"	19' 0"	22' 0"	20' 0"	17' 6"	24' 8"	22' 6"	19' 0"
1200S300-54	50	15' 8"e	12' 6"e	8' 3"e	11' 7"e	9' 2"e	6' 4"e	15' 8"e	12' 6"e	8' 3"e	11' 7"e	9' 2"e	6' 4"e
1200S300-68	50	18' 6"e	16' 0"e	13' 1"e	17' 6"	14' 6"	10' 10"e	18' 6"e	16' 0"e	13' 1"e	17' 6"	14' 6"	10' 10"e
1200S300-97	50	23' 7"	20' 8"	16' 10"e	23' 10"	20' 8"	16' 10"	21' 4"	19' 6"	16' 10"e	23' 10"	20' 8"	16' 10"
1200S300-118	50	25' 1"	22' 9"	19' 10"	28' 1"	24' 8"	20' 2"	22' 9"	20' 8"	18' 1"	25' 7"	23' 2"	20' 2"
1200S350-54	50	16' 8"e	12' 6"e	8' 3"e	12' 1"e	9' 4"e	6' 6"e	16' 8"e	12' 6"e	8' 3"e	12' 1"e	9' 4"e	6' 6"e
1200S350-68	50	20' 7"e	17' 9"e	14' 7"e	18' 9"	15' 4"e	11' 4"e	20' 1"e	17' 9"e	14' 7"e	18' 9"	15' 4"e	11' 4"e
1200S350-97	50	24' 8"	22' 6"e	18' 7"e	26' 3"	22' 9"	18' 6"	22' 6"	20' 4"	17' 9"e	25' 2"	22' 9"	18' 6"
1200S350-118	50	26' 3"	23' 10"	20' 10"e	29' 6"	26' 9"	22' 0"	23' 10"	21' 8"	19' 0"	26' 9"	24' 4"	21' 3"
1400S162-54	50	14' 3"e	10' 8"e	7' 1"e	10' 6"e	8' 1"e	5' 7"e	14' 3"e	10' 8"e	7' 1"e	10' 6"e	8' 1"e	5' 7"e
1400S162-68	50	17' 4"e	15' 0"e	12' 3"e	16' 3"	13' 4"	9' 9"e	17' 4"e	15' 0"e	12' 3"e	16' 3"	13' 4"	9' 9"e
1400S162-97	50	22' 8"	19' 8"	16' 1"e	22' 8"	19' 8"	16' 1"	21' 8"	19' 8"	16' 1"e	22' 8"	19' 8"	16' 1"
1400S162-118	50	25' 7"	22' 9"	18' 7"	26' 3"	22' 9"	18' 7"	23' 2"	21' 1"	18' 6"	26' 1"	22' 9"	18' 7"
1400S200-54	50	14' 3"e	10' 8"e	7' 1"e	10' 7"e	8' 2"e	5' 7"e	14' 3"e	10' 8"e	7' 1"e	10' 7"e	8' 2"e	5' 7"e
1400S200-68	50	18' 9"e	16' 2"e	13' 3"e	16' 10"	13' 9"	10' 1"e	18' 9"e	16' 2"e	13' 3"e	16' 10"	13' 9"	10' 1"e
1400S200-97	50	24' 4"	21' 1"e	17' 2"e	24' 4"	21' 1"	17' 1"	22' 7"	20' 6"	17' 2"e	24' 4"	21' 1"	17' 1"
1400S200-118	50	26' 7"	24' 1"	19' 10"	28' 1"	24' 4"	19' 10"	24' 1"	21' 10"	19' 2"	27' 1"	24' 4"	19' 10"
1400S250-54	50	14' 3"e	10' 8"e	7' 1"e	10' 7"e	8' 2"e	5' 7"e	14' 3"e	10' 8"e	7' 1"e	10' 7"e	8' 2"e	5' 7"e
1400S250-68	50	19' 6"e	16' 10"e	13' 9"e	17' 0"	13' 9"	10' 1"e	19' 6"e	16' 10"e	13' 9"e	17' 0"	13' 9"	10' 1"e
1400S250-97	50	25' 3"	21' 10"e	17' 10"e	25' 3"	21' 10"	17' 7"	23' 4"	21' 3"e	17' 10"e	25' 3"	21' 10"	17' 7"
1400S250-118	50	27' 6"	25' 0"	20' 7"e	29' 2"	25' 3"	20' 7"	25' 0"	22' 8"	19' 10"	28' 1"	25' 3"	20' 7"
1400S300-54	50	14' 3"e	10' 8"e	7' 1"e	10' 7"e	8' 2"e	5' 7"e	14' 3"e	10' 8"e	7' 1"e	10' 7"e	8' 2"e	5' 7"e
1400S300-68	50	19' 10"e	17' 3"e	14' 1"e	17' 1"	13' 10"	10' 1"e	19' 10"e	17' 3"e	14' 1"e	17' 1"	13' 10"	10' 1"e
1400S300-97	50	25' 10"	22' 4"e	18' 3"e	25' 10"	22' 4"	18' 0"	24' 2"	22' 0"e	18' 3"e	25' 10"	22' 4"	18' 0"
1400S300-118	50	28' 4"	25' 9"	21' 1"e	29' 10"	25' 10"	21' 1"	25' 9"	23' 6"	20' 6"e	29' 0"	25' 10"	21' 1"
1400S350-54	50	14' 3"e	10' 8"e	7' 1"e	10' 10"e	8' 3"e	5' 7"e	14' 3"e	10' 8"e	7' 1"e	10' 10"e	8' 3"e	5' 7"e
1400S350-68	50	22' 2"e	19' 3"e	14' 3"e	18' 4"	14' 9"e	10' 7"e	22' 2"e	19' 3"e	14' 3"e	18' 4"	14' 9"e	10' 7"e
1400S350-97	50	28' 0"e	24' 8"e	20' 2"e	28' 6"	24' 8"	20' 0"e	25' 4"	23' 1"e	20' 2"e	28' 6"	24' 8"	20' 0"e
1400S350-118	50	29' 8"	27' 0"	23' 7"e	33' 4"	29' 3"	23' 10"	27' 0"	24' 6"	21' 4"e	30' 3"	27' 7"	23' 10"
1600S162-68	50	18' 2"e	15' 9"e	12' 6"e	16' 1"e	12' 10"e	9' 2"e	18' 2"e	15' 9"e	12' 6"e	16' 1"e	12' 10"e	9' 2"e
1600S162-97	50	24' 0"	20' 9"e	17' 0"e	24' 0"	20' 9"	16' 9"	24' 0"	20' 9"e	17' 0"e	24' 0"	20' 9"	16' 9"
1600S162-118	50	28' 0"	24' 2"	19' 9"e	28' 0"	24' 2"	19' 9"	26' 0"	23' 7"	19' 9"e	28' 0"	24' 2"	19' 9"
1600S200-68	50	19' 8"e	17' 1"e	12' 6"e	16' 7"e	13' 2"e	9' 3"e	19' 8"e	17' 1"e	12' 6"e	16' 7"e	13' 2"e	9' 3"e
1600S200-97	50	25' 9"	22' 4"e	18' 3"e	25' 9"	22' 4"	17' 8"	25' 1"	22' 4"e	18' 3"e	25' 9"	22' 4"	17' 8"
1600S200-118	50	29' 7"	25' 10"	21' 2"e	29' 10"	25' 10"	21' 2"	26' 10"	24' 6"	21' 2"e	29' 10"	25' 10"	21' 2"
1600S250-68	50	20' 7"e	17' 9"e	12' 6"e	16' 7"e	13' 2"e	9' 4"e	20' 7"e	17' 9"e	12' 6"e	16' 7"e	13' 2"e	9' 4"e
1600S250-97	50	26' 10"	23' 3"e	19' 0"e	26' 10"	23' 2"	18' 2"	25' 10"	23' 3"e	19' 0"e	26' 10"	23' 2"	18' 2"
1600S250-118	50	30' 7"	27' 0"	22' 0"e	31' 1"	27' 0"	22' 0"	27' 9"	25' 3"	22' 0"e	31' 1"	27' 0"	22' 0"
1600S300-68	50	21' 1"e	18' 3"e	12' 6"e	16' 8"e	13' 3"e	9' 4"e	21' 1"e	18' 3"e	12' 6"e	16' 8"e	13' 3"e	9' 4"e
1600S300-97	50	27' 7"e	23' 10"e	19' 6"e	27' 7"	23' 9"	18' 7"e	26' 8"	23' 10"e	19' 6"e	27' 7"	23' 9"	18' 7"e
1600S300-118	50	31' 7"	27' 8"	22' 7"e	32' 0"	27' 8"	22' 7"	28' 8"	26' 1"	22' 7"e	32' 0"	27' 8"	22' 7"
1600S350-68	50	23' 8"e	18' 8"e	12' 6"e	17' 6"e	13' 8"e	9' 7"e	23' 8"e	18' 8"e	12' 6"e	17' 6"e	13' 8"e	9' 7"e
1600S350-97	50	30' 6"e	26' 4"e	21' 7"e	29' 7"	25' 0"	19' 6"e	28' 0"e	25' 4"e	21' 7"e	29' 7"	25' 0"	19' 6"e
1600S350-118	50	33' 0"	30' 0"e	24' 9"e	35' 1"	30' 4"	24' 7"	30' 0"	27' 2"	23' 9"e	33' 8"	30' 4"	24' 7"

NOTE: See page 43 for Table Notes.

HEADER ALLOWABLE UNIFORM LOADS (lb/ft)

NOTES

1. Values are for unpunched members.
2. Total load deflection is limited to L/360.
3. Headers are made from two "boxed" or back to back members.
4. Allowable moment, shear, web crippling and moment of inertia are based on twice the capacity of a single member.
5. Web crippling check is based on 1" of bearing at end supports.
6. Members are assumed to be adequately braced for bending.
7. Allowable loads are for simply supported headers with uniform bending loads only.
8. "e" web stiffeners required at ends.
9. See General Notes on Page 6.

MEMBER	DESIGN THICKNESS (in.)	F_y (ksi)	4 (ft)	5 (ft)	6 (ft)	7 (ft)	8 (ft)	9 (ft)	10 (ft)	11 (ft)	12 (ft)	13 (ft)	14 (ft)	15 (ft)	16 (ft)
362S162-33	0.0346	33	480.e	307.e	214.e	140.e	94.e	66	-	-	-	-	-	-	-
362S162-43	0.0451	33	705.e	451.e	287.e	181.e	121	85	62	-	-	-	-	-	-
362S162-43 (50)	0.0451	50	882.e	496.e	287.e	181	121	85	62	-	-	-	-	-	-
362S162-54	0.0566	50	1192.e	610.e	353	222	149	105	76	57	-	-	-	-	-
362S162-68	0.0713	50	1460.e	747	432	272	182	128	93	70	54	-	-	-	-
362S162-97	0.1017	50	1960.e	1004	581	366	245	172	125	94	73	57	-	-	-
362S162-118	0.1242	50	2285	1170	677	426	286	201	146	110	85	67	53	-	-
600S162-33	0.0346	33	638.e	510.e	422.e	310.e	238.e	188.e	152.e	118.e	91.e	71.e	57.e	-	-
600S162-43	0.0451	33	1390.e	889.e	618.e	454.e	347.e	275.e	202.e	152.e	117.e	92.e	74	60	-
600S162-43 (50)	0.0451	50	1415.e	1126.e	782.e	575.e	395.e	278.e	202.e	152.e	117	92	74	60	-
600S162-54	0.0566	50	2527.e	1617.e	1123.e	729.e	488.e	343.e	250.e	188	145	114	91	74	61
600S162-68	0.0713	50	3288.e	2105.e	1426.e	898.e	602.e	423.e	308	231	178	140	112	91	75
600S162-97	0.1017	50	4727.e	3025.e	1941.e	1223.e	819	575	419	315	243	191	153	124	102
600S162-118	0.1242	50	5745.e	3677.e	2287.e	1441	965	678	494	371	286	225	180	146	121
800S162-33	0.0346	33	474.e	379.e	316.e	271.e	237.e	211.e	187.e	155.e	130.e	111.e	95.e	83.e	72.e
800S162-43	0.0451	33	1051.e	841.e	701.e	548.e	420.e	332.e	269.e	222.e	186.e	159.e	137.e	116.e	96.e
800S162-43 (50)	0.0451	50	1051.e	841.e	701.e	601.e	525.e	427.e	346.e	286.e	221.e	174.e	139.e	113.e	93
800S162-54	0.0566	50	2091.e	1673.e	1363.e	1001.e	766.e	606.e	487.e	366.e	282.e	222.e	177.e	144	119
800S162-68	0.0713	50	4150.e	2656.e	1845.e	1355.e	1038.e	820.e	616.e	463.e	357.e	281.e	225	183	150
800S162-97	0.1017	50	6058.e	3877.e	2693.e	1978.e	1515.e	1165.e	849.e	638.e	491	386	309	252	207
800S162-118	0.1242	50	8768.e	5612.e	3897.e	2863.e	1964.e	1379.e	1006.e	755	582	458	366	298	245
1000S162-33	0.0346	33	377.e	302.e	251.e	215.e	188.e	168.e	151.e	137.e	126.e	116.e	108.e	101.e	93.e
1000S162-43	0.0451	33	836.e	669.e	557.e	478.e	418.e	371.e	334.e	284.e	238.e	203.e	175.e	153.e	134.e
1000S162-43 (50)	0.0451	50	836.e	669.e	557.e	478.e	418.e	371.e	334.e	304.e	279.e	257.e	224.e	188.e	155.e
1000S162-54	0.0566	50	1660.e	1328.e	1107.e	949.e	830.e	738.e	628.e	519.e	436.e	370.e	297.e	241.e	199.e
1000S162-68	0.0713	50	3345.e	2676.e	2230.e	1755.e	1344.e	1062.e	860.e	711.e	597.e	474.e	380.e	309.e	254.e
1000S162-97	0.1017	50	8157.e	5221.e	3625.e	2664.e	2039.e	1611.e	1305.e	1079.e	858.e	675.e	540.e	439	362
1000S162-118	0.1242	50	10064.e	6441.e	4473.e	3286.e	2516.e	1988.e	1610.e	1324.e	1020.e	802.e	642	522	430
1200S162-43	0.0451	33	694.e	555.e	462.e	396.e	347.e	308.e	277.e	252.e	231.e	213.e	198.e	185.e	163.e
1200S162-43 (50)	0.0451	50	694.e	555.e	462.e	396.e	347.e	308.e	277.e	252.e	231.e	213.e	198.e	185.e	173.e
1200S162-54	0.0566	50	1377.e	1102.e	918.e	787.e	689.e	612.e	551.e	501.e	459.e	424.e	390.e	340.e	298.e
1200S162-68	0.0713	50	2770.e	2216.e	1847.e	1583.e	1385.e	1231.e	1056.e	873.e	733.e	625.e	539.e	469.e	390.e
1200S162-97	0.1017	50	8145.e	6516.e	4537.e	3333.e	2552.e	2016.e	1633.e	1350.e	1134.e	966.e	833.e	689.e	568.e
1200S162-118	0.1242	50	12894.e	8252.e	5731.e	4210.e	3224.e	2547.e	2063.e	1705.e	1433.e	1221.e	1024.e	832.e	686.e
1400S162-54	0.0566	50	1176.e	941.e	784.e	672.e	588.e	523.e	471.e	428.e	392.e	362.e	336.e	314.e	294.e
1400S162-68	0.0713	50	2364.e	1891.e	1576.e	1351.e	1182.e	1051.e	946.e	860.e	788.e	727.e	638.e	556.e	489.e
1400S162-97	0.1017	50	6938.e	5550.e	4625.e	3964.e	3065.e	2422.e	1962.e	1621.e	1362.e	1161.e	1001.e	872.e	766.e
1400S162-118	0.1242	50	12743.e	10031.e	6966.e	5118.e	3918.e	3096.e	2508.e	2072.e	1741.e	1484.e	1279.e	1115.e	980.e
1600S162-68	0.0713	50	2062.e	1649.e	1375.e	1178.e	1031.e	916.e	825.e	750.e	687.e	634.e	589.e	550.e	515.e
1600S162-97	0.1017	50	6042.e	4834.e	4028.e	3453.e	3021.e	2685.e	2291.e	1893.e	1591.e	1355.e	1169.e	1018.e	895.e
1600S162-118	0.1242	50	11086.e	8868.e	7390.e	6027.e	4615.e	3646.e	2953.e	2441.e	2051.e	1748.e	1507.e	1313.e	1154.e

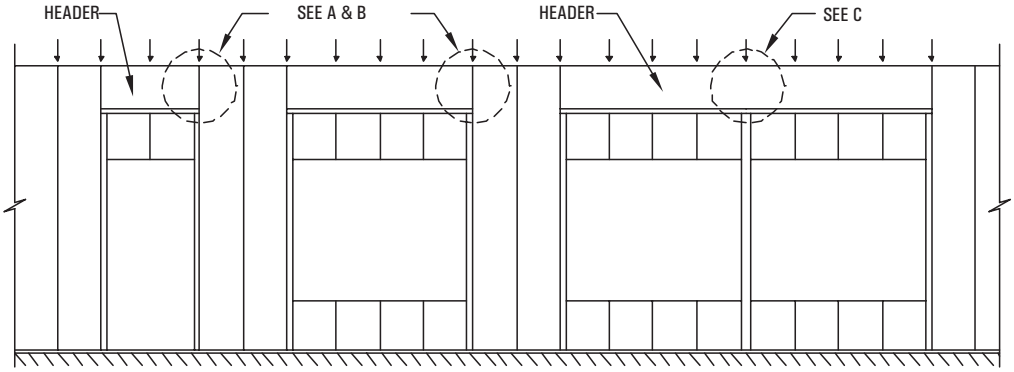

@ DOOR @ WINDOW @ DOUBLE WINDOW WITH INTERMEDIATE SUPPORT

For more information, please contact Marino\WARE® Technical Services at 866.545.1545
This technical information reflects the most current information available and supersedes any and all
previous publications effective February 17, 2023 | MW-Cold Formed Catalog | © WARE Industries, Inc., 2023

HEADER ALLOWABLE UNIFORM LOADS (lb/ft)

MEMBER	DESIGN THICKNESS (in.)	F_y (ksi)	17 (ft)	18 (ft)	19 (ft)	20 (ft)	21 (ft)	22 (ft)	23 (ft)	24 (ft)	25 (ft)	26 (ft)	27 (ft)	28 (ft)	29 (ft)	30 (ft)
362S162-33	0.0346	33	-	-	-	-	-	-	-	-	-	-	-	-	-	-
362S162-43	0.0451	33	-	-	-	-	-	-	-	-	-	-	-	-	-	-
362S162-43 (50)	0.0451	50	-	-	-	-	-	-	-	-	-	-	-	-	-	-
362S162-54	0.0566	50	-	-	-	-	-	-	-	-	-	-	-	-	-	-
362S162-68	0.0713	50	-	-	-	-	-	-	-	-	-	-	-	-	-	-
362S162-97	0.1017	50	-	-	-	-	-	-	-	-	-	-	-	-	-	-
362S162-118	0.1242	50	-	-	-	-	-	-	-	-	-	-	-	-	-	-
600S162-33	0.0346	33	-	-	-	-	-	-	-	-	-	-	-	-	-	-
600S162-43	0.0451	33	-	-	-	-	-	-	-	-	-	-	-	-	-	-
600S162-43 (50)	0.0451	50	-	-	-	-	-	-	-	-	-	-	-	-	-	-
600S162-54	0.0566	50	51	-	-	-	-	-	-	-	-	-	-	-	-	-
600S162-68	0.0713	50	63	53	-	-	-	-	-	-	-	-	-	-	-	-
600S162-97	0.1017	50	85	72	61	52	-	-	-	-	-	-	-	-	-	-
600S162-118	0.1242	50	101	85	72	62	53	-	-	-	-	-	-	-	-	-
800S162-33	0.0346	33	60.e	50.e	--	-	-	-	-	-	-	-	-	-	-	-
800S162-43	0.0451	33	80.e	67.e	57.e	-	-	-	-	-	-	-	-	-	-	-
800S162-43 (50)	0.0451	50	78	66	56	-	-	-	-	-	-	-	-	-	-	-
800S162-54	0.0566	50	99	83	71	61	53	-	-	-	-	-	-	-	-	-
800S162-68	0.0713	50	125	106	90	77	67	58	51	-	-	-	-	-	-	-
800S162-97	0.1017	50	173	146	124	106	92	80	70	61	54	-	-	-	-	-
800S162-118	0.1242	50	205	172	147	126	109	94	83	73	64	57	51	-	-	-
1000S162-33	0.0346	33	82.e	73.e	66.e	59.e	52.e	-	-	-	-	-	-	-	-	-
1000S162-43	0.0451	33	119.e	106.e	95.e	82.e	71.e	61.e	54.e	-	-	-	-	-	-	-
1000S162-43 (50)	0.0451	50	129.e	109.e	92.e	79.e	68.e	60.e	52.e	-	-	-	-	-	-	-
1000S162-54	0.0566	50	166.e	140.e	119.e	102	88	76	67	59	52	-	-	-	-	-
1000S162-68	0.0713	50	212.e	179	152	130	112	98	86	75	67	59	53	-	-	-
1000S162-97	0.1017	50	302	254	216	185	160	139	122	107	95	84	75	68	61	55
1000S162-118	0.1242	50	359	302	257	220	190	166	145	128	113	100	90	80	72	65
1200S162-43	0.0451	33	144.e	129.e	116.e	104.e	95.e	86.e	79.e	72.e	63.e	56.e	50.e	-	-	-
1200S162-43 (50)	0.0451	50	163.e	154.e	139.e	120.e	103.e	90.e	79.e	69.e	61.e	54.e	-	-	-	-
1200S162-54	0.0566	50	252.e	212.e	180.e	154.e	133.e	116.e	102.e	89.e	79.e	70.e	63.e	56.e	51.e	-
1200S162-68	0.0713	50	325.e	274.e	233.e	199.e	172.e	150	131	115	102	91	81	73	65	59
1200S162-97	0.1017	50	473.e	399.e	339	291	251	218	191	168	149	132	118	106	95	86
1200S162-118	0.1242	50	572.e	482	410	351	303	264	231	203	180	160	143	128	115	104
1400S162-54	0.0566	50	277.e	261.e	248.e	220.e	190.e	165.e	144.e	127.e	112.e	100.e	89.e	80.e	72.e	65.e
1400S162-68	0.0713	50	433.e	386.e	333.e	285.e	247.e	214.e	188.e	165.e	146.e	130.e	116	104	94	85
1400S162-97	0.1017	50	679.e	579.e	492.e	422.e	364.e	317.e	277.e	244	216	192	171	154	138	125
1400S162-118	0.1242	50	846.e	712.e	606.e	519.e	449.e	390	342	301	266	236	211	189	170	154
1600S162-68	0.0713	50	485.e	446.e	401.e	362.e	328.e	292.e	256.e	225.e	199.e	177.e	158.e	142.e	127.e	115.e
1600S162-97	0.1017	50	793.e	707.e	635.e	573.e	502.e	437.e	382.e	336.e	298.e	265.e	236.e	212	191	172
1600S162-118	0.1242	50	1022.e	912.e	818.e	721.e	623.e	542.e	474.e	417.e	369.e	328	293	263	237	214

NOTE: See page 56 for Table Notes.

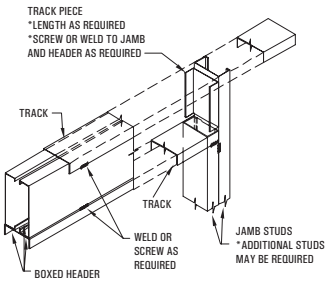

DETAIL A

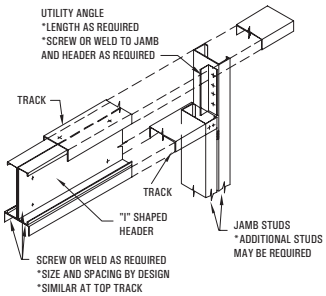

DETAIL B

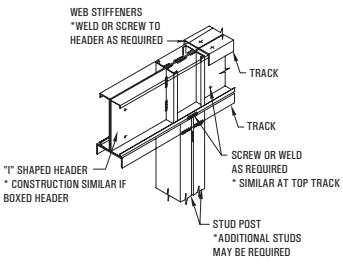

DETAIL C

WEB CRIPPLING LOAD TABLES

NOTES

1. Listed allowable loads apply only to C-sections.
2. For back-to-back members, the listed allowable loads are for the entire two-member assembly.
3. Listed allowable loads are based on members "fastened to supports", except back-to-back members under two-flange loading (Cases 3 and 4) for which data for "fastened to support" is unavailable in AISI S100.
4. For back-to-back members, the distance between the web connectors and the flange shall be kept to a minimum.
5. Listed allowable loads are for non-punched webs. Capacity reductions for end and interior one flange loading (Cases 1 and 2) near punchouts can be calculated based on AISI S100 (G6).
6. "h" refers to the flat dimension of the web. See web depth-to-thickness ratios table herein.
7. + If N/h>2, then N was set equal to 2h.
8. * If N/t > 210, then N was set equal to 210(t)
9. See General Notes on Page 6.

Web Crippling Cases

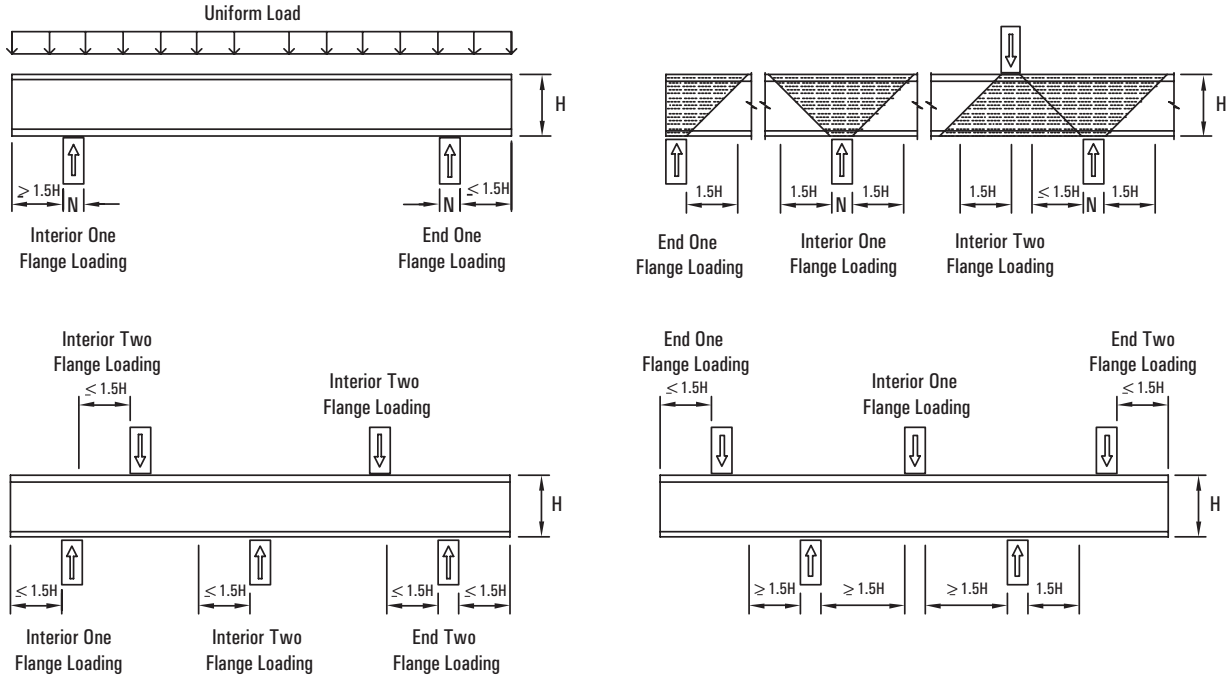

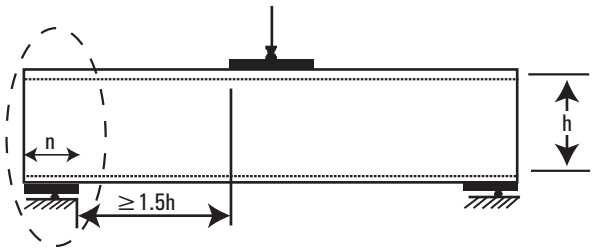

END ONE FLANGE LOADING - CASE 1

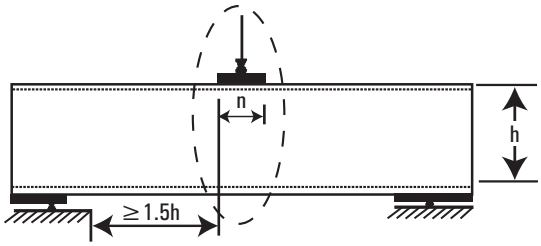

INTERIOR ONE FLANGE LOADING - CASE 2

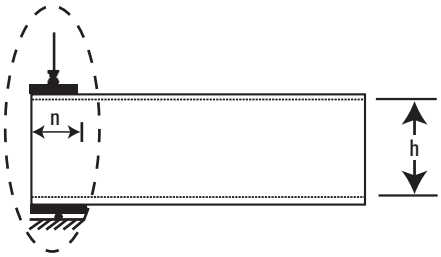

END TWO FLANGE LOADING - CASE 3

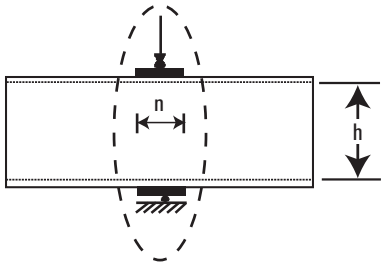

INTERIOR TWO FLANGE LOADING - CASE 4

For more information, please contact Marino\WARE® Technical Services at 866.545.1545
This technical information reflects the most current information available and supersedes any and all previous publications effective February 17, 2023 | MW-Cold Formed Catalog | © WARE Industries, Inc., 2023

Allowable Web Crippling Loads (lbs) - Single Members

MEMBER	DESIGN THICKNESS (in.)	DESIGNATION THICKNESS (mils)	F_y (ksi)	CASE 1 FASTENED TO SUPPORT BEARING LENGTH (in.) 1.0	3.5	6.0	CASE 2 FASTENED TO SUPPORT BEARING LENGTH (in.) 1.0	3.5	6.0	CASE 3 FASTENED TO SUPPORT BEARING LENGTH (in.) 1.0	3.5	6.0	CASE 4 FASTENED TO SUPPORT BEARING LENGTH (in.) 1.0	3.5	6.0
250S	0.0346	33	33	173	271	300+	330	453	491+	150	201	216+	411	519	552+
	0.0451	43	33	287	443	489+	580	780	840+	267	351	376+	720	892	943+
	0.0451	43	50	435	671	741+	878	1182	1272+	405	532	570+	1092	1352	1429+
	0.0566	54	50	656	996	1087+	1350	1785	1903+	652	842	893+	1730	2109	2212+
	0.0713	68	50	990	1480	1592+	2073	2693	2836+	1049	1333	1398+	2750	3302	3428+
	0.1017	97	50	1872	2726	2848+	4025	5095	5248+	2167	2683	2757+	5597	6575	6715+
362S	0.0346	33	33	165	259	322	323	444	525	129	173	202	381	480	547
	0.0451	43	33	277	427	526	570	767	898	236	311	360	675	836	943
	0.0451	43	50	419	647	798	863	1162	1360	358	471	546	1023	1267	1429
	0.0566	54	50	634	963	1182	1329	1758	2043	588	760	874	1635	1994	2232
	0.0713	68	50	962	1437	1752	2044	2657	3064	961	1221	1393	2618	3143	3492
	0.1017	97	50	1827	2659	3212	3978	5035	5738	2020	2501	2821	5374	6313	6936
	0.1242	118	50	2625	3764	4521	5799	7235	8189	3053	3729	4178	8044	9340	10201
400S	0.0346	33	33	163	256	317	322	442	522	122	164	192	372	469	534
	0.0451	43	33	274	422	520	567	763	893	227	299	346	662	819	924
	0.0451	43	50	415	639	789	859	1156	1354	344	453	525	1003	1242	1400
	0.0566	54	50	628	954	1170	1323	1750	2034	569	735	846	1607	1960	2194
	0.0713	68	50	953	1424	1737	2036	2646	3051	936	1188	1356	2579	3096	3440
	0.1017	97	50	1814	2640	3189	3965	5018	5718	1978	2448	2761	5309	6236	6852
	0.1242	118	50	2608	3739	4491	5781	7212	8163	2996	3659	4099	7956	9238	10090
600S	0.0346	33	33	153	240	297	313	430	507	93	125	146	329	416	473
	0.0451	43	33	259	400	493	553	745	872	185	243	282	600	743	838
	0.0451	43	50	393	605	747	838	1128	1321	281	369	427	909	1125	1269
	0.0566	54	50	599	909	1116	1295	1713	1991	482	623	716	1478	1802	2017
	0.0713	68	50	914	1366	1666	1998	2596	2994	816	1036	1183	2399	2881	3201
	0.1017	97	50	1752	2551	3081	3902	4939	5628	1781	2205	2487	5010	5885	6466
	0.1242	118	50	2528	3625	4354	5698	7108	8046	2734	3339	3741	7555	8772	9581
800S	0.0451	43	33	247	381	470	542	730	854	150	197	228	548	678	765
	0.0451	43	50	374	577	712	821	1105	1294	227	298	346	830	1028	1159
	0.0566	54	50	575	872	1070	1272	1682	1955	409	529	608	1370	1670	1869
	0.0713	68	50	882	1318	1607	1966	2555	2946	716	910	1038	2250	2701	3001
	0.1017	97	50	1702	2477	2992	3850	4873	5553	1618	2003	2259	4761	5593	6145
	0.1242	118	50	2462	3531	4241	5629	7023	7949	2518	3075	3445	7223	8387	9160
1000S	0.0566	54	50	553	840	1031	1251	1655	1923	346	447	514	1275	1554	1740
	0.0713	68	50	854	1275	1555	1938	2518	2904	629	799	912	2119	2544	2826
	0.1017	97	50	1657	2412	2914	3805	4815	5487	1476	1827	2060	4545	5338	5866
	0.1242	118	50	2405	3449	4143	5569	6948	7864	2330	2845	3187	6934	8051	8794
1200S	0.0713	68	50	828	1237	1509	1913	2485	2866	551	699	798	2001	2402	2669
	0.1017	97	50	1618	2355	2844	3764	4764	5428	1348	1668	1882	4350	5109	5614
	0.1242	118	50	2354	3375	4054	5515	6881	7788	2161	2638	2956	6675	7750	8465
1400S	0.0713	68	50	805	1202	1466	1889	2455	2831	479	608	694	1892	2272	2525
	0.1017	97	50	1581	2301	2780	3726	4716	5374	1230	1523	1718	4171	4900	5384
	0.1242	118	50	2307	3308	3973	5466	6819	7719	2006	2449	2744	6437	7474	8164
1600S	0.1017	97	50	1547	2252	2721	3692	4673	5324	1121	1388	1566	4005	4705	5170
	0.1242	118	50	2263	3245	3898	5420	6762	7654	1862	2274	2548	6217	7219	7884

NOTE: See page 58 for Table Notes.

WEB CRIPPLING LOADS

Allowable Web Crippling Loads (lbs) - Back to Back Members

MEMBER	DESIGN THICKNESS (in.)	DESIGNATION THICKNESS (mils)	F_y (ksi)	CASE 1 FASTENED TO SUPPORT BEARING LENGTH (in.) 1.0	3.5	6.0	CASE 2 FASTENED TO SUPPORT BEARING LENGTH (in.) 1.0	3.5	6.0	CASE 3 FASTENED TO SUPPORT BEARING LENGTH (in.) 1.0	3.5	6.0	Case 4 FASTENED TO SUPPORT BEARING LENGTH (in.) 1.0	3.5	6.0
250S	0.0346	33	33	777	1015+	1015+	1092	1298+	1298+	512	591+	591+	1088	1255+	1255+
	0.0451	43	33	1273	1640+	1640+	1864	2186+	2186+	910	1036+	1036+	1964	2236+	2236+
	0.0451	43	50	1929	2484+	2484+	2824	3312+	3312+	1379	1570+	1570+	2976	3388+	3388+
	0.0566	54	50	2871	3630+	3630+	4318	4986+	4986+	2213	2485+	2485+	4786	5375+	5375+
	0.0713	68	50	4291	5310+	5310+	6621	7518+	7518+	3557	3937+	3937+	7692	8515+	8515+
	0.1017	97	50	8011	9551+	9551+	12845	14200+	14200+	7342	7948+	7948+	15879	17189+	17189+
362S	0.0346	33	33	776	1170+	1170+	1090	1432+	1432+	458	574+	574+	972	1219+	1219+
	0.0451	43	33	1271	1880+	1880+	1861	2396+	2396+	830	1021+	1021+	1790	2203+	2203+
	0.0451	43	50	1926	2848+	2848+	2820	3630+	3630+	1257	1547+	1547+	2713	3338+	3338+
	0.0566	54	50	2867	4150+	4150+	4312	5441+	5441+	2045	2471+	2471+	4422	5343+	5343+
	0.0713	68	50	4285	6057+	6057+	6613	8171+	8171+	3322	3941+	3941+	7185	8523+	8523+
	0.1017	97	50	8002	10866+	10866+	12831	15350+	15350+	6946	8012+	8012+	15022	17328+	17328+
	0.1242	118	50	11411	15115+	15115+	18681	21940+	21940+	10484	11906+	11906+	22675	25750+	25750+
400S	0.0346	33	33	776	1181	1215+	1089	1442	1471+	442	557	567+	937	1183	1203+
	0.0451	43	33	1271	1900	1951+	1860	2413	2457+	806	998	1013+	1739	2154	2187+
	0.0451	43	50	1925	2879	2956+	2818	3656	3723+	1221	1512	1536+	2635	3263	3314+
	0.0566	54	50	2866	4215	4303+	4310	5497	5575+	1995	2432	2461+	4315	5260	5322+
	0.0713	68	50	4284	6193	6276+	6610	8290	8363+	3253	3906	3935+	7036	8448	8510+
	0.1017	97	50	8000	11248+	11248+	12827	15684+	15684+	6830	8020+	8020+	14772	17346+	17346+
	0.1242	118	50	11408	15641+	15641+	18676	22399+	22399+	10329	11930+	11930+	22338	25802+	25802+
600S	0.0346	33	33	774	1178	1426+	1086	1438	1653+	366	462	521+	778	982	1107+
	0.0451	43	33	1268	1896	2279+	1856	2408	2744+	696	862	963+	1501	1859	2077+
	0.0451	43	50	1921	2873	3452+	2812	3648	4157+	1054	1305	1458+	2275	2817	3147+
	0.0566	54	50	2860	4207	5011+	4302	5486	6193+	1765	2152	2383+	3818	4654	5154+
	0.0713	68	50	4276	6182	7287+	6599	8275	9247+	2935	3524	3865+	6347	7621	8359+
	0.1017	97	50	7988	11240	13004+	12808	15668	17220+	6299	7399	7996+	13623	16002	17294+
	0.1242	118	50	11392	15784	18046+	18650	22513	24503+	9616	11165	11963+	20797	24147	25873+
800S	0.0451	43	33	1266	1892	2309	1853	2403	2769	603	747	843	1302	1613	1819
	0.0451	43	50	1918	2867	3498	2807	3641	4195	914	1132	1277	1973	2443	2756
	0.0566	54	50	2855	4200	5093	4295	5477	6263	1573	1918	2147	3402	4148	4643
	0.0713	68	50	4270	6173	7438	6589	8263	9375	2669	3205	3561	5772	6931	7701
	0.1017	97	50	7978	11226	13384	12792	15649	17547	5859	6882	7562	12671	14883	16354
	0.1242	118	50	11379	15766	18682	18629	22488	25052	9028	10482	11449	19524	22670	24760
1000S	0.0566	54	50	2851	4194	5086	4288	5469	6254	1405	1713	1917	3038	3704	4146
	0.0713	68	50	4264	6165	7428	6580	8252	9363	2437	2926	3251	5270	6327	7030
	0.1017	97	50	7969	11213	13369	12778	15631	17528	5474	6430	7065	11839	13906	15280
	0.1242	118	50	11368	15751	18663	18610	22466	25027	8515	9887	10798	18416	21383	23354
1200S	0.0713	68	50	4259	6158	7419	6573	8243	9352	2227	2674	2971	4817	5784	6426
	0.1017	97	50	7961	11202	13356	12765	15616	17511	5128	6024	6619	11091	13028	14315
	0.1242	118	50	11358	15737	18647	18594	22446	25005	8055	9352	10215	17420	20227	22091
1400S	0.0713	68	50	4255	6151	7411	6566	8234	9342	2035	2444	2715	4401	5285	5872
	0.1017	97	50	7954	11192	13344	12754	15602	17495	4811	5651	6210	10405	12223	13430
	0.1242	118	50	11348	15724	18631	18579	22427	24985	7633	8863	9680	16509	19168	20936
1600S	0.1017	97	50	7947	11183	13333	12743	15589	17480	4517	5306	5830	9769	11475	12609
	0.1242	118	50	11340	15712	18617	18565	22410	24966	7242	8409	9184	15663	18187	19864

NOTE: See page 58 for Table Notes.

For more information, please contact Marino\WARE® Technical Services at 866.545.1545
This technical information reflects the most current information available and supersedes any and all previous publications effective February 17, 2023 | MW-Cold Formed Catalog | © WARE Industries, Inc., 2023

CEILING SPANS (C-SECTIONS)

NOTES

1. Values are for simple span conditions.
2. For unbraced sections, the allowable moment is based on AISI S100 with the unbraced length assumed to be the listed span. For mid-span braced members, the allowable moment is based on AISI S100 with the unbraced length to be half the listed span.
3. Web crippling calculation is based on a bearing length of 1".
4. Web crippling and shear capacity have NOT been reduced for punchouts. If web punchouts occur near supports, members must be checked for reduced shear and web crippling based on AISI S100.
5. "e" indicates that web stiffeners are required at ends.
6. * 13 psf requires a G60 minimum coating.
7. See General Notes on Page 6.

Mid-Span Bracing Details for Ceilings

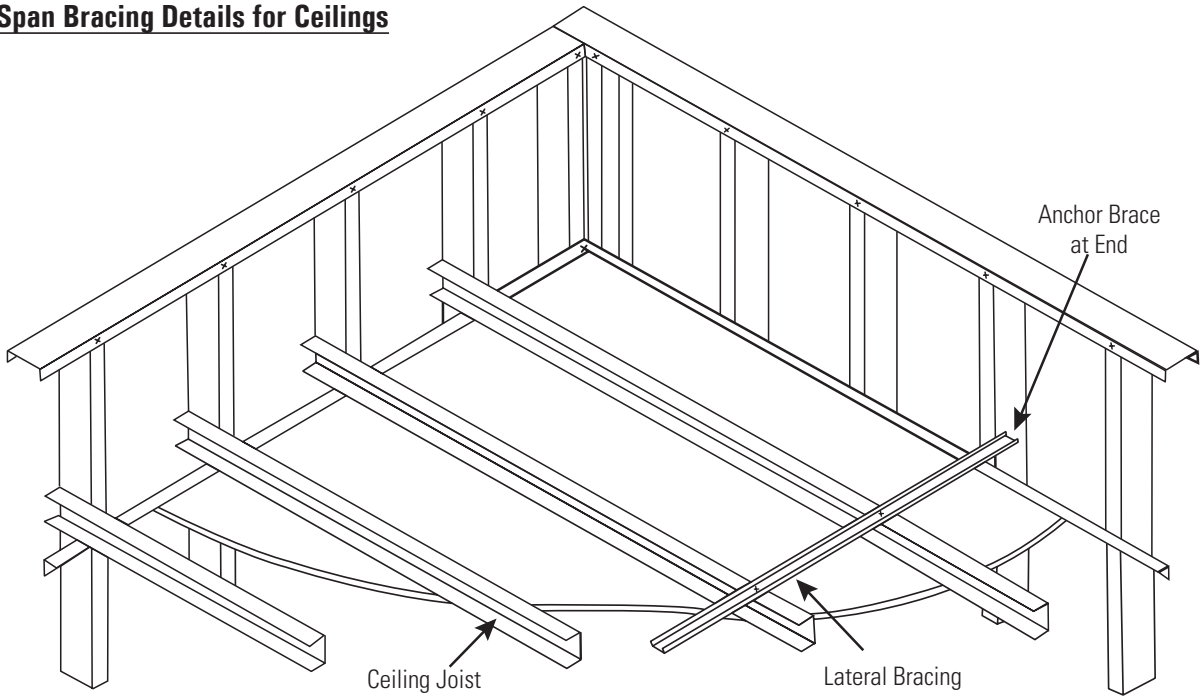

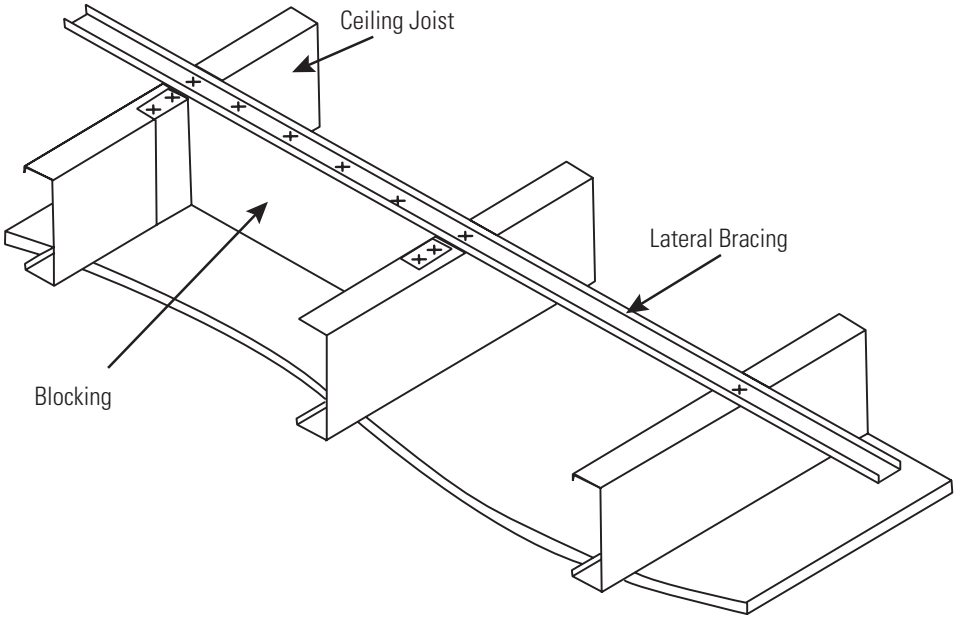

General Note: All connections should be designed by a licensed design professional.

CEILING SPANS (C-SECTIONS)

Allowable Ceiling Spans (ft) - L/240

MEMBER	F_y (ksi)	4 psf LATERAL SPPORT OF COMPRESSION FLANGE						6 psf LATERAL SPPORT OF COMPRESSION FLANGE						13 psf* LATERAL SPPORT OF COMPRESSION FLANGE					
		UNSUPPORTED			MIDSPAN			UNSUPPORTED			MIDSPAN			UNSUPPORTED			MIDSPAN		
		JOIST SPACING (in.) o.c.						JOIST SPACING (in.) o.c.						JOIST SPACING (in.) o.c.					
		12	16	24	12	16	24	12	16	24	12	16	24	12	16	24	12	16	24
250S137-33	33	11' 9"	10' 10"	9' 9"	14' 11"	13' 6"	11' 10"	10' 6"	9' 9"	8' 8"	13' 0"	11' 10"	10' 4"	8' 6"	7' 10"	7' 0"	10' 0"	9' 1"	8' 0"
250S137-43	33	13' 2"	12' 1"	10' 9"	16' 2"	14' 8"	12' 10"	11' 8"	10' 9"	9' 7"	14' 2"	12' 10"	11' 3"	9' 4"	8' 7"	7' 8"	10' 11"	9' 11"	8' 8"
250S137-43 (50)	50	13' 2"	12' 1"	10' 9"	16' 2"	14' 8"	12' 10"	11' 8"	10' 9"	9' 7"	14' 2"	12' 10"	11' 3"	9' 4"	8' 7"	7' 8"	10' 11"	9' 11"	8' 8"
250S162-33	33	13' 5"	12' 5"	11' 1"	15' 8"	14' 3"	12' 5"	12' 0"	11' 1"	10' 0"	13' 8"	12' 5"	10' 10"	9' 9"	9' 0"	8' 0"	10' 7"	9' 7"	8' 4"
250S162-43	33	14' 11"	13' 9"	12' 3"	17' 0"	15' 5"	13' 6"	13' 3"	12' 3"	10' 11"	14' 10"	13' 6"	11' 9"	10' 8"	9' 10"	8' 9"	11' 6"	10' 5"	9' 1"
250S162-43 (50)	50	14' 11"	13' 9"	12' 3"	17' 0"	15' 5"	13' 6"	13' 3"	12' 3"	10' 11"	14' 10"	13' 6"	11' 9"	10' 8"	9' 10"	8' 10"	11' 6"	10' 5"	9' 1"
362S137-33	33	12' 11"	11' 11"	10' 8"	18' 3"	16' 11"	15' 2"	11' 7"	10' 8"	9' 7"	16' 4"	15' 2"	13' 5"	9' 5"	8' 9"	7' 10"	13' 1"	11' 11"	10' 2"
362S137-43	33	14' 4"	13' 2"	11' 9"	20' 0"	18' 6"	16' 6"	12' 9"	11' 9"	10' 6"	17' 10"	16' 6"	14' 9"	10' 3"	9' 6"	8' 6"	14' 5"	13' 2"	11' 5"
362S137-43 (50)	50	14' 4"	13' 2"	11' 9"	20' 0"	18' 6"	16' 6"	12' 9"	11' 9"	10' 6"	17' 10"	16' 6"	14' 9"	10' 3"	9' 6"	8' 6"	14' 6"	13' 3"	11' 6"
362S162-33	33	14' 8"	13' 7"	12' 2"	20' 9"	18' 11"	16' 6"	13' 2"	12' 2"	11' 0"	18' 2"	16' 6"	14' 5"	10' 9"	9' 11"	8' 11"	14' 0"	12' 9"	11' 1"
362S162-43	33	16' 2"	14' 11"	13' 4"	22' 7"	20' 7"	17' 11"	14' 5"	13' 4"	11' 11"	19' 9"	17' 11"	15' 8"	11' 8"	10' 9"	9' 8"	15' 3"	13' 10"	12' 1"
362S162-43 (50)	50	16' 2"	14' 11"	13' 4"	22' 7"	20' 7"	17' 11"	14' 5"	13' 4"	11' 11"	19' 9"	17' 11"	15' 8"	11' 8"	10' 9"	9' 8"	15' 3"	13' 10"	12' 1"
400S137-33	33	13' 3"	12' 3"	11' 0"	18' 9"	17' 4"	15' 6"	11' 11"	11' 0"	9' 10"	16' 9"	15' 6"	13' 10"	9' 8"	9' 0"	8' 1"	13' 6"	12' 4"	10' 7"
400S137-43	33	14' 8"	13' 6"	12' 0"	20' 6"	18' 11"	16' 11"	13' 0"	12' 0"	10' 9"	18' 4"	16' 11"	15' 2"	10' 6"	9' 9"	8' 8"	14' 10"	13' 7"	11' 10"
400S137-43 (50)	50	14' 8"	13' 6"	12' 0"	20' 6"	18' 11"	16' 11"	13' 0"	12' 0"	10' 9"	18' 4"	16' 11"	15' 2"	10' 6"	9' 9"	8' 8"	14' 10"	13' 9"	12' 4"
400S162-33	33	15' 1"	14' 0"	12' 6"	21' 5"	19' 10"	17' 9"	13' 6"	12' 6"	11' 3"	19' 2"	17' 9"	15' 6"	11' 0"	10' 3"	9' 3"	15' 2"	13' 9"	11' 9"
400S162-43	33	16' 7"	15' 3"	13' 8"	23' 4"	21' 7"	19' 4"	14' 9"	13' 8"	12' 3"	20' 10"	19' 4"	16' 11"	12' 0"	11' 1"	9' 11"	16' 6"	15' 0"	13' 1"
400S162-43 (50)	50	16' 7"	15' 3"	13' 8"	23' 4"	21' 7"	19' 4"	14' 9"	13' 8"	12' 3"	20' 10"	19' 4"	16' 11"	12' 0"	11' 1"	9' 11"	16' 6"	15' 0"	13' 1"
600S137-33	33	14' 10"	13' 9"	12' 4"	21' 4"	19' 10"	17' 10"	13' 4"	12' 4"	11' 1"	19' 3"	17' 10"	16' 0"	10' 10"	10' 1"	9' 1"	15' 8"	14' 6"	12' 10"e
600S137-43	33	16' 2"	15' 0"	13' 5"	23' 0"	21' 4"	19' 2"	14' 6"	13' 5"	12' 0"	20' 8"	19' 2"	17' 3"	11' 9"	10' 10"	9' 9"	16' 11"	15' 8"	14' 1"
600S137-43 (50)	50	16' 2"	15' 0"	13' 5"	23' 0"	21' 4"	19' 2"	14' 6"	13' 5"	12' 0"	20' 8"	19' 2"	17' 3"	11' 9"	10' 10"	9' 9"	16' 11"	15' 8"	14' 1"
600S162-33	33	16' 10"	15' 8"	14' 1"	24' 4"	22' 7"	20' 4"	15' 2"	14' 1"	12' 8"	21' 11"	20' 4"	18' 4"	12' 5"	11' 6"	10' 4"	18' 0"	16' 8"	14.'10"
600S162-43	33	18' 4"	17' 0"	15' 3"	26' 3"	24' 4"	21' 10"	16' 5"	15' 3"	13' 8"	23' 7"	21' 10"	19' 8"	13' 4"	12' 5"	11' 2"	19' 3"	17' 11"	16' 0"
600S162-43 (50)	50	18' 4"	17' 0"	15' 3"	26' 3"	24' 4"	21' 10"	16' 5"	15' 3"	13' 8"	23' 7"	21' 10"	19' 8"	13' 4"	12' 5"	11' 2"	19' 3"	17' 11"	16' 1"
800S137-33	33	16' 1"	14' 11"	13' 5"	23' 2"	21' 5"	19' 2"	14' 6"	13' 5"	12' 1"	20' 9"	19' 2"	17' 2"	11' 10"	11' 0"	9' 11"	16' 10"	15' 7"	14' 0"e
800S137-43	33	17' 6"	16' 2"	14' 6"	25' 0"	23' 2"	20' 10"	15' 8"	14' 6"	13' 0"	22' 6"	20' 10"	18' 9"	12' 9"	11' 10"	10' 7"	18' 4"	17' 0"	15' 3"
800S137-43 (50)	50	17' 6"	16' 2"	14' 6"	25' 0"	23' 2"	20' 10"	15' 8"	14' 6"	13' 0"	22' 6"	20' 10"	18' 9"	12' 9"	11' 10"	10' 7"	18' 4"	17' 0"	15' 3"
800S162-33	33	18' 4"	17' 0"	15' 4"	26' 4"	24' 4"	21' 10"	16' 6"	15' 4"	13' 9"	23' 7"	21' 10"	19' 7"	13' 6"	12' 6"	11' 3"e	19'2"	17' 9"e	15' 10"e
800S162-43	33	19' 10"	18' 4"	16' 6"	28' 6"	26' 5"	23' 9"	17' 10"	16' 6"	14' 10"	25' 8"	23' 9"	21' 4"	14' 6"	13' 6"	12' 1"	20' 11"	19' 4"	17' 4"
800S162-43 (50)	50	19' 10"	18' 4"	16' 6"	28' 6"	26' 5"	23' 9"	17' 10"	16' 6"	14' 10"	25' 8"	23' 9"	21' 4"	14' 6"	13' 6"	12' 1"	20' 11"	19' 4"	17' 4"

Allowable Ceiling Spans (ft) - L/360

MEMBER	F_y (ksi)	4 psf LATERAL SPPORT OF COMPRESSION FLANGE						6 psf LATERAL SPPORT OF COMPRESSION FLANGE						13 psf* LATERAL SPPORT OF COMPRESSION FLANGE					
		UNSUPPORTED			MIDSPAN			UNSUPPORTED			MIDSPAN			UNSUPPORTED			MIDSPAN		
		JOIST SPACING (in.) o.c.						JOIST SPACING (in.) o.c.						JOIST SPACING (in.) o.c.					
		12	16	24	12	16	24	12	16	24	12	16	24	12	16	24	12	16	24
250S137-33	33	11' 9"	10' 10"	9' 9"	13' 0"	11' 10"	10' 4"	10' 6"	9' 9"	8' 8"	11' 4"	10' 4"	9' 0"	8' 6"	7' 10"	6' 11"	8' 9"	8' 0"	6' 11"
250S137-43	33	13' 2"	12' 1"	10' 9"	14' 2"	12' 10"	11' 3"	11' 8"	10' 9"	9' 7"	12' 4"	11' 3"	9' 9"	9' 4"	8' 7"	7' 7"	9' 6"	8' 8"	7' 7"
250S137-43 (50)	50	13' 2"	12' 1"	10' 9"	14' 2"	12' 10"	11' 3"	11' 8"	10' 9"	9' 7"	12' 4"	11' 3"	9' 9"	9' 4"	8' 7"	7' 7"	9' 6"	8' 8"	7' 7"
250S162-33	33	13' 5"	12' 5"	10' 10"	13' 8"	12' 5"	10' 10"	11' 11"	10' 10"	9' 6"	11' 11"	10' 10"	9' 6"	9' 3"	8' 4"	7' 4"	9' 3"	8' 4"	7' 4"
250S162-43	33	14' 10"	13' 6"	11' 9"	14' 10"	13' 6"	11' 9"	13' 0"	11' 9"	10' 3"	13' 0"	11' 9"	10' 3"	10' 0"	9' 1"	7' 11"	10' 0"	9' 1"	7' 11"
250S162-43 (50)	50	14' 10"	13' 6"	11' 9"	14' 10"	13' 6"	11' 9"	13' 0"	11' 9"	10' 3"	13' 0"	11' 9"	10' 3"	10' 0"	9' 1"	7' 11"	10' 0"	9' 1"	7' 11"
362S137-33	33	12' 11"	11' 11"	10' 8"	17' 4"	15' 9"	13' 9"	11' 7"	10' 8"	9' 7"	15' 2"	13' 9"	12' 0"	9' 5"	8' 9"	7' 10"	11' 8"	10' 7"	9' 3"
362S137-43	33	14' 4"	13' 2"	11' 9"	18' 10"	17' 1"	14' 11"	12' 9"	11' 9"	10' 6"	16' 6"	14' 11"	13' 1"	10' 3"	9' 6"	8' 6"	12' 9"	11' 6"	10' 1"
362S137-43 (50)	50	14' 4"	13' 2"	11' 9"	18' 10"	17' 1"	14' 11"	12' 9"	11' 9"	10' 6"	16' 6"	14' 11"	13' 1"	10' 3"	9' 6"	8' 6"	12' 9"	11' 6"	10' 1"
362S162-33	33	14' 8"	13' 7"	12' 2"	18' 2"	16' 6"	14' 5"	13' 2"	12' 2"	11' 0"	15' 10"	14' 5"	12' 7"	10' 9"	9' 11"	8' 11"	12' 3"	11' 1"	9' 9"
362S162-43	33	16' 2"	14' 11"	13' 4"	19' 9"	17' 11"	15' 8"	14' 5"	13' 4"	11' 11"	17' 3"	15' 8"	13' 8"	11' 8"	10' 9"	9' 8"	13' 4"	12' 1"	10' 7"
362S162-43 (50)	50	16' 2"	14' 11"	13' 4"	19' 9"	17' 11"	15' 8"	14' 5"	13' 4"	11' 11"	17' 3"	15' 8"	13' 8"	11' 8"	10' 9"	9' 8"	13' 4"	12' 1"	10' 7"
400S137-33	33	13' 3"	12' 3"	11' 0"	18' 9"	17' 0"	14' 10"	11' 11"	11' 0"	9' 10"	16' 4"	14' 10"	13' 0"	9' 8"	9' 0"	8' 1"	12' 7"	11' 6"	10' 0"
400S137-43	33	14' 8"	13' 6"	12' 0"	20' 4"	18' 6"	16' 2"	13' 0"	12' 0"	10' 9"	17' 9"	16' 2"	14' 1"	10' 6"	9' 9"	8' 8"	13' 9"	12' 6"	10' 11"
400S137-43 (50)	50	14' 8"	13' 6"	12' 0"	20' 4"	18' 6"	16' 2"	13' 0"	12' 0"	10' 9"	17' 9"	16' 2"	14' 1"	10' 6"	9' 9"	8' 8"	13' 9"	12' 6"	10' 11"
400S162-33	33	15' 1"	14' 0"	12' 6"	19' 7"	17' 9"	15' 6"	13' 6"	12' 6"	11' 3"	17' 1"	15' 6"	13' 7"	11' 0"	10' 3"	9' 3"	13' 3"	12' 0"	10' 6"
400S162-43	33	16' 7"	15' 3"	13' 8"	21' 4"	19' 4"	16' 11"	14' 9"	13' 8"	12' 3"	18' 7"	16' 11"	14' 9"	12' 0"	11' 1"	9' 11"	14' 5"	13' 1"	11' 5"
400S162-43 (50)	50	16' 7"	15' 3"	13' 8"	21' 4"	19' 4"	16' 11"	14' 9"	13' 8"	12' 3"	18' 7"	16' 11"	14' 9"	12' 0"	11' 1"	9' 11"	14' 5"	13' 1"	11' 5"
600S137-33	33	14' 10"	13' 9"	12' 4"	21' 4"	19' 10"	17' 10"	13' 4"	12' 4"	11' 1"	19' 3"	17' 10"	16' 0"	10' 10"	10' 1"	9' 1"	15' 8"	14' 6"	12' 10"e
600S137-43	33	16' 2"	15' 0"	13' 5"	23' 0"	21' 4"	19' 2"	14' 6"	13' 5"	12' 0"	20' 8"	19' 2"	17' 3"	11' 9"	10' 10"	9' 9"	16' 11"	15' 8"	14' 1"
600S137-43 (50)	50	16' 2"	15' 0"	13' 5"	23' 0"	21' 4"	19' 2"	14' 6"	13' 5"	12' 0"	20' 8"	19' 2"	17' 3"	11' 9"	10' 10"	9' 9"	16' 11"	15' 8"	14' 1"
600S162-33	33	16' 10"	15' 8"	14' 1"	24' 4"	22' 7"	20' 4"	15' 2"	14' 1"	12' 8"	21' 11"	20' 4"	18' 4"	12' 5"	11' 6"	10' 4"	18' 0"	16' 6"	14' 4"e
600S162-43	33	18' 4"	17' 0"	15' 3"	26' 3"	24' 4"	21' 10"	16' 5"	15' 3"	13' 8"	23' 7"	21' 10"	19' 8"	13' 4"	12' 5"	11' 2"	19' 3"	17' 11"	15' 8"
600S162-43 (50)	50	18' 4"	17' 0"	15' 3"	26' 3"	24' 4"	21' 10"	16' 5"	15' 3"	13' 8"	23' 7"	21' 10"	19' 8"	13' 4"	12' 5"	11' 2"	19' 3"	17' 11"	15' 8"
800S137-33	33	16' 1"	14' 11"	13' 5"	23' 2"	21' 5"	19' 2"	14' 6"	13' 5"	12' 1"	20' 9"	19' 2"	17' 2"	11' 10"	11' 0"	9' 11"	16' 10"	15' 7"	14' 0"e
800S137-43	33	17' 6"	16' 2"	14' 6"	25' 0"	23' 2"	20' 10"	15' 8"	14' 6"	13' 0"	22' 6"	20' 10"	18' 9"	12' 9"	11' 10"	10' 7"	18' 4"	17' 0"	15' 3"
800S137-43 (50)	50	17' 6"	16' 2"	14' 6"	25' 0"	23' 2"	20' 10"	15' 8"	14' 6"	13' 0"	22' 6"	20' 10"	18' 9"	12' 9"	11' 10"	10' 7"	18' 4"	17' 0"	15' 3"
800S162-33	33	18' 4"	17' 0"	15' 4"	26' 4"	24' 4"	21' 10"	16' 6"	15' 4"	13' 9"	23' 7"	21' 10"	19' 7"	13' 6"	12' 6"	11' 3"e	19' 2"	17' 9"e	15' 10"e
800S162-43	33	19' 10"	18' 4"	16' 6"	28' 6"	26' 5"	23' 9"	17' 10"	16' 6"	14' 10"	25' 8"	23' 9"	21' 4"	14' 6"	13' 6"	12' 1"	20' 11"	19' 4"	17' 4"
800S162-43 (50)	50	19' 10"	18' 4"	16' 6"	28' 6"	26' 5"	23' 9"	17' 10"	16' 6"	14' 10"	25' 8"	23' 9"	21' 4"	14' 6"	13' 6"	12' 1"	20' 11"	19' 4"	17' 4"

NOTE: See page 61 for Table Notes.

For more information, please contact Marino\WARE® Technical Services at 866.545.1545
This technical information reflects the most current information available and supersedes any and all
previous publications effective February 17, 2023 | MW-Cold Formed Catalog | © WARE Industries, Inc., 2023

SECTION PROPERTIES AND CEILING SPANS (U-SECTIONS)

ALLOWABLE CEILING SPAN (U-SECTIONS) NOTES

1. Multiple span indicates two or more equal spans continuous over interior supports.
2. Compression flanges assumed unbraced.
3. Web crippling based on 3/4" bearing at end and interior supports.
4. When applicable, cold work of forming was considered as per Section A3.3.2 of AISI S100-16/S2-20.

Allowable Ceiling Spans (U-Sections) - L/240

MEMBER	F_y (ksi)	SPAN TYPE	4 psf CHANNEL SPACING (in.) o.c.					6 psf CHANNEL SPACING (in.) o.c.					13 psf CHANNEL SPACING (in.) o.c.					15 psf CHANNEL SPACING (in.) o.c.				
			24	36	48	60	72	24	36	48	60	72	24	36	48	60	72	24	36	48	60	72
75U050-54	33	Single	3' 10"	3' 4"	3' 1"	2' 10"	2' 8"	3' 4"	2' 11"	2' 8"	2' 6"	2' 4"	2' 7"	2' 3"	2' 1"	1' 11"	1' 9"	2' 6"	2' 2"	1' 11"	1' 10"	1' 8"
	33	Multiple	4' 9"	4' 2"	3' 9"	3' 6"	3' 4"	4' 2"	3' 8"	3' 4"	3' 1"	2' 10"	3' 3"	2' 9"	2' 4"	2' 1"	1' 11"	3' 1"	2' 7"	2' 3"	2' 0"	1' 9"
150U050-54	33	Single	5' 6"	4' 10"	4' 5"	4' 1"	3' 10"	4' 10"	4' 3"	3' 10"	3' 7"	3' 4"	3' 9"	3' 3"	3' 0"	2' 9"	2' 7"	3' 7"	3' 2"	2' 10"	2' 8"	2' 6"
	33	Multiple	7' 1"	6' 2"	5' 7"	5' 3"	4' 11"	6' 2"	5' 5"	4' 11"	4' 7"	4' 4"	4' 9"	4' 2"	3' 10"	3' 6"	3' 2"	4' 7"	4' 0"	3' 7"	3' 3"	3' 0"
200U050-54	33	Single	5' 10"	5' 1"	4' 8"	4' 4"	4' 1"	5' 1"	4' 5"	4' 1"	3' 9"	3' 7"	3' 11"	3' 6"	3' 2"	2' 11"	2' 9"	3' 9"	3' 4"	3' 0"	2' 10"	2' 8"
	33	Multiple	7' 5"	6' 6"	5' 11"	5' 6"	5' 2"	6' 6"	5' 8"	5' 2"	4' 10"	4' 6"	5' 0"	4' 5"	4' 0"	3' 9"	3' 6"	4' 10"	4' 3"	3' 10"	3' 7"	3' 4"
250U050-54	33	Single	6' 1"	5' 3"	4' 10"	4' 6"	4' 3"	5' 3"	4' 8"	4' 3"	3' 11"	3' 9"	4' 1"	3' 7"	3' 4"	3' 1"	2' 11"	3' 11"	3' 6"	3' 2"	2' 11"	2' 9"
	33	Multiple	7' 9"	6' 9"	6' 2"	5' 9"	5' 5"	6' 9"	5' 11"	5' 5"	5' 0"	4' 9"	5' 3"	4' 7"	4' 2"	3' 11"	3' 8"	5' 0"	4' 5"	4' 0"	3' 9"	3' 6"

Allowable Ceiling Spans (U-Sections) - L/360

MEMBER	F_y (ksi)	SPAN TYPE	4 psf CHANNEL SPACING (in.) o.c.					6 psf CHANNEL SPACING (in.) o.c.					13 psf CHANNEL SPACING (in.) o.c.					15 psf CHANNEL SPACING (in.) o.c.				
			24	36	48	60	72	24	36	48	60	72	24	36	48	60	72	24	36	48	60	72
75U050-54	33	Single	3' 4"	2' 11"	2' 8"	2' 6"	2' 4"	2' 11"	2' 7"	2' 4"	2' 2"	2' 0"	2' 3"	2' 0"	1' 9"	1' 8"	1' 7"	2' 2"	1' 10"	1' 8"	1' 7"	1' 6"
	33	Multiple	4' 2"	3' 8"	3' 4"	3' 1"	2' 10"	3' 8"	3' 2"	2' 10"	2' 8"	2' 6"	2' 10"	2' 5"	2' 3"	2' 1"	1' 11"	2' 8"	2' 4"	2' 1"	1' 11"	1' 9"
150U050-54	33	Single	5' 6"	4' 10"	4' 5"	4' 1"	3' 10"	4' 10"	4' 3"	3' 10"	3' 7"	3' 4"	3' 9"	3' 3"	3' 0"	2' 9"	2' 7"	3' 7"	3' 2"	2' 10"	2' 8"	2' 6"
	33	Multiple	7' 1"	6' 2"	5' 7"	5' 3"	4' 11"	6' 2"	5' 5"	4' 11"	4' 7"	4' 4"	4' 9"	4' 2"	3' 10"	3' 6"	3' 2"	4' 7"	4' 0"	3' 7"	3' 3"	3' 0"
200U050-54	33	Single	5' 10"	5' 1"	4' 8"	4' 4"	4' 1"	5' 1"	4' 5"	4' 1"	3' 9"	3' 7"	3' 11"	3' 6"	3' 2"	2' 11"	2' 9"	3' 9"	3' 4"	3' 0"	2' 10"	2' 8"
	33	Multiple	7' 5"	6' 6"	5' 11"	5' 6"	5' 2"	6' 6"	5' 8"	5' 2"	4' 10"	4' 6"	5' 0"	4' 5"	4' 0"	3' 9"	3' 6"	4' 10"	4' 3"	3' 10"	3' 7"	3' 4"
250U050-54	33	Single	6' 1"	5' 3"	4' 10"	4' 6"	4' 3"	5' 3"	4' 8"	4' 3"	3' 11"	3' 9"	4' 1"	3' 7"	3' 4"	3' 1"	2' 11"	3' 11"	3' 6"	3' 2"	2' 11"	2' 9"
	33	Multiple	7' 9"	6' 9"	6' 2"	5' 9"	5' 5"	6' 9"	5' 11"	5' 5"	5' 0"	4' 9"	5' 3"	4' 7"	4' 2"	3' 11"	3' 8"	5' 0"	4' 5"	4' 0"	3' 9"	3' 6"

U-Channel Section Properties

MEMBER	F_y (ksi)	DESIGN THICKNESS (in.)	AREA (in.^{2})	WEIGHT (lb/ft)	GROSS PROPERTIES I_x (in.^{4})	r_x (in.)	I_y (in.^{4})	r_y (in.)	EFFECTIVE PROPERTIES I_{xd} (in.^{4})	S_{xe} (in.^{3})	M_a (in.-k)	V_a (lb)
75U050-54	33	0.0566	0.0867	0.295	0.00720	0.288	0.00210	0.156	0.00720	0.0192	0.454	315
150U050-54	33	0.0566	0.129	0.439	0.0387	0.548	0.00271	0.145	0.0387	0.0516	1.22	840
200U050-54	33	0.0566	0.158	0.536	0.0792	0.709	0.00294	0.137	0.0792	0.0792	1.88	1190
250U050-54	33	0.0566	0.186	0.632	0.139	0.866	0.00310	0.129	0.139	0.112	2.64	1540

Note: Inside bend radius taken as 3/32".

MARINO WARE®

100% American-Owned and Operated | marinoware.com

New Jersey Facility
400 Metuchen Road
South Plainfield, NJ 07080
800.627.4661
908.757.9000
Fax: 908.412.1442

Georgia Facility
777 Greenbelt Parkway
Griffin, GA 30223
800.504.8199
678.688.1312
Fax: 678.688.1379

Indiana Facility
4245 Railroad Avenue
East Chicago, IN 46312
866.636.6002
219.378.7100
Fax: 219.378.7106

New York Sales Office
51 John St., Ste 1
Babylon, NY 11702
800.627.4667
631.691.2200
Fax: 631.691.1492

Engineering Office
100 Hendrick Drive, Ste 200
McDonough, GA 30253
866.545.1545
678.688.7780
Fax: 770.507.2605

www.marinoware.com

For more information, please contact Marino\WARE® Technical Services at 866.545.1545

This technical information reflects the most current information available and supersedes any and all previous publications effective February 17, 2023 | MW-Cold Formed Catalog | © WARE Industries Inc., 2023